California High-Speed Rail Authority

San Francisco to San Jose Project Section

Composite Plans; Stations; Structures; Roadway; Alignment Data Table

Alternative B – Scott Blvd. to W. Alma Ave (Viaduct to I-880)
Draft EIR/S: Volume III

Preliminary Engineering for Project Definition
Record Set – April 2019

SAN FRANCISCO TO SAN JOSE EIR/S: VOLUME III
ALTERNATIVE B
BOOK B5
SHEET 83 TO 111 OF 142

CALIFORNIA High-Speed Rail Authority

The environmental review, consultation, and other actions required by applicable federal environmental laws for this project are being or have been carried out by the State of California pursuant to 23 U.S.C. 327 and a Memorandum of Understanding dated July 23, 2019, and executed by the Federal Railroad Administration and the State of California.

ALTERNATIVE B - SAN FRANCISCO TO SAN JOSE (SCOTT BOULEVARD TO W. ALMA AVE) - VIADUCT TO I-880

BOOK	SHEET NO	DRAWING NO	SUBSECTION	GEOGRAPHIC LOCATION OR FEATURE	ALIGNMENT OR FEATURE	SHEET DESCRIPTION	ADDITIONAL DESCRIPTION
COVER, INDEX OF DRAWING AND KEY MAPS							
BOOK B5	A	COVER		SCOTT BLVD TO W. ALMA AVE	ALTERNATIVE B	SCOTT BLVD TO W. ALMA	VIADUCT TO I-881
BOOK B5	B	GE-A2105			INDEX OF DRAWINGS	SHEET 5 OF 6	
BOOK B5	C	GE-D2101	ENTIRE ALTERNATIVE		KEY MAP	COMPOSITE PLAN	SHEET 1 OF 4
BOOK B5	D	GE-D2102	ENTIRE ALTERNATIVE		KEY MAP	COMPOSITE PLAN	SHEET 2 OF 4
BOOK B5	E	GE-D2103	ENTIRE ALTERNATIVE		KEY MAP	COMPOSITE PLAN	SHEET 3 OF 4
BOOK B5	F	GE-D2104	ENTIRE ALTERNATIVE		KEY MAP	COMPOSITE PLAN	SHEET 4 OF 4
BOOK B5	G	GE-D2105	ENTIRE ALTERNATIVE		KEY MAP	SYSTEM SITES	
COMPOSITE PLAN, PROFILE AND TYPICAL SECTIONS							
BOOK B5	83	TT-D0151	SAN JOSE DIRIDON STATION APPROACH	SCOTT BLVD TO BROKAW RD	VIADUCT TO I-880	COMPOSITE PLAN, PROFILE AND CROSS SECTIONS	B2250+00 TO B2340+00
BOOK B5	84	TT-D0152	SAN JOSE DIRIDON STATION APPROACH	I-880 TO W TAYLOR ST	VIADUCT TO I-880	COMPOSITE PLAN, PROFILE AND CROSS SECTIONS	B2340+00 TO B2430+00
BOOK B5	85	TT-D0153	SAN JOSE DIRIDON STATION APPROACH	CINNABAR ST TO PARK AVE	VIADUCT TO I-880	COMPOSITE PLAN, PROFILE AND CROSS SECTIONS	B2430+00 TO B58+00
BOOK B5	86	TT-D0301	SAN JOSE DIRIDON STATION APPROACH	PARK AVE TO WILLOW ST	VIADUCT TO I-880	COMPOSITE PLAN, PROFILE AND CROSS SECTIONS	B58+00 TO B125+00
BOOK B5	87	TT-D0401	SAN JOSE DIRIDON STATION APPROACH	WILLOW ST TO CURTNER AVE	VIADUCT TO I-880	COMPOSITE PLAN, PROFILE AND CROSS SECTIONS	B125+00 TO B211+00
STATIONS							
BOOK B5	88	AR-C0101	SAN JOSE DIRIDON STATION APPROACH	SANTA CLARA ST, PARK AVE	VIADUCT TO I-880	SAN JOSE DIRIDON STATION	CONCEPTUAL SITE PLAN
BOOK B5	89	AR-C0102	SAN JOSE DIRIDON STATION APPROACH	SANTA CLARA ST, PARK AVE	VIADUCT TO I-880	SAN JOSE DIRIDON STATION	DETAILED SITE PLAN
BOOK B5	90	AR-F0101	SAN JOSE DIRIDON STATION APPROACH	SANTA CLARA ST, PARK AVE	VIADUCT TO I-880	SAN JOSE DIRIDON STATION	CONCOURSE PLAN
BOOK B5	91	AR-Y0101	SAN JOSE DIRIDON STATION APPROACH	SANTA CLARA ST, PARK AVE	VIADUCT TO I-880	SAN JOSE DIRIDON STATION	CROSS SECTION
BOOK B5	92	AR-Y0102	SAN JOSE DIRIDON STATION APPROACH	SANTA CLARA ST, PARK AVE	VIADUCT TO I-880	SAN JOSE DIRIDON STATION	MASSING DIAGRAM
BOOK B5	93	AR-Y0103	SAN JOSE DIRIDON STATION APPROACH	SANTA CLARA ST, PARK AVE	VIADUCT TO I-880	SAN JOSE DIRIDON STATION	MASSING DIAGRAM
BOOK B5	94	AR-Y0104	SAN JOSE DIRIDON STATION APPROACH	N/A	VIADUCT TO I-880	SAN JOSE DIRIDON STATION	FACILITY SIZING TABLE
BOOK B5	95	AR-Y0105	SAN JOSE DIRIDON STATION APPROACH	N/A	VIADUCT TO I-880	SAN JOSE DIRIDON STATION	FACILITY SIZING TABLE
BOOK B5	96	AR-Y0106	SAN JOSE DIRIDON STATION APPROACH	N/A	VIADUCT TO I-880	SAN JOSE DIRIDON STATION	FACILITY SIZING TABLE
BOOK B5	97	AR-Y0107	SAN JOSE DIRIDON STATION APPROACH	N/A	VIADUCT TO I-880	SAN JOSE DIRIDON STATION	FACILITY SIZING TABLE
STRUCTURES							
BOOK B5	98	ST-V0151	SAN JOSE DIRIDON STATION APPROACH	W TAYLOR ST	VIADUCT TO I-880	COMPLEX STRUCTURES	GENERAL PLAN 1 OF 2
BOOK B5	99	ST-V0152	SAN JOSE DIRIDON STATION APPROACH	W SANTA CLARA ST	VIADUCT TO I-880	COMPLEX STRUCTURES	GENERAL PLAN 2 OF 2
BOOK B5	100	ST-T0151	SAN JOSE DIRIDON STATION APPROACH	UPRR T-13, W TAYLOR ST	VIADUCT TO I-880	OVERPASSES AND UNDERPASSES	HEDDING ST AND TAYLOR ST
BOOK B5	101	ST-V0301	SAN JOSE DIRIDON STATION APPROACH	N/A	VIADUCT TO I-880	TYPICAL SECTIONS	SHEET 1 OF 3
BOOK B5	102	ST-V0302	SAN JOSE DIRIDON STATION APPROACH	N/A	VIADUCT TO I-880	TYPICAL SECTIONS	SHEET 2 OF 3
BOOK B5	103	ST-V0303	SAN JOSE DIRIDON STATION APPROACH	N/A	VIADUCT TO I-880	TYPICAL SECTIONS	SHEET 3 OF 3
BOOK B5	104	ST-T0301	SAN JOSE DIRIDON STATION APPROACH	I-880, SR 85	VIADUCT TO I-880	CALTRANS STRUCTURES	GENERAL PLAN
ROADWAY							
BOOK B5	105	CV-T0151	SAN JOSE DIRIDON STATION APPROACH	CHESTNUT AVE, ELM ST	VIADUCT TO I-880	PLAN, PROFILE AND TYPICAL SECTIONS	WEST HEDDING STREET
BOOK B5	106	CV-T0152	SAN JOSE DIRIDON STATION APPROACH	W TAYLOR ST, COLEMAN AVE	VIADUCT TO I-880	PLAN, PROFILE AND TYPICAL SECTIONS	WEST TAYLOR STREET
TRACK GUIDEWAY HORIZONTAL ALIGNMENT DATA TABLE							
BOOK B5	107	TT-B0101-JM	SAN JOSE DIRIDON STATION APPROACH	N/A	VIADUCT TO I-880	TRACK ALIGNMENT DATA TABLE	CURVE NO. C189 AND C190
BOOK B5	108	TT-B0102-JM	SAN JOSE DIRIDON STATION APPROACH	N/A	VIADUCT TO I-880	TRACK ALIGNMENT DATA TABLE	CURVE NO. C191 AND C192
BOOK B5	109	TT-B0103-JM	SAN JOSE DIRIDON STATION APPROACH	N/A	VIADUCT TO I-880	TRACK ALIGNMENT DATA TABLE	CURVE NO. C193
BOOK B5	110	TT-B0104	SAN JOSE DIRIDON STATION APPROACH	N/A	VIADUCT TO I-880	B2 TRACK ALIGNMENT DATA TABLE	CURVE NO. C101 AND C102
BOOK B5	111	TT-B0105	SAN JOSE DIRIDON STATION APPROACH	N/A	VIADUCT TO I-880	B2 TRACK ALIGNMENT DATA TABLE	CURVE NO. C103 AND C104

SAN FRANCISCO TO SAN JOSE EIR/S: VOLUME III
ALTERNATIVE B
BOOK B5
SHEET B

REV	DATE	BY	CHK	APP	DESCRIPTION

DESIGNED BY
DRAWN BY
CHECKED BY
IN CHARGE
DATE

RECORD PEPD SUBMITTAL
APRIL 11, 2019
NOT FOR CONSTRUCTION

HNTB
1111 Broadway
9th Floor
Oakland, CA 94607

CALIFORNIA High-Speed Rail Authority

CALIFORNIA HIGH-SPEED TRAIN PROJECT
SAN FRANCISCO TO SAN JOSE
ALTERNATIVE B
INDEX OF DRAWINGS
SHEET 5 OF 6

CONTRACT NO. HSR15-34
DRAWING NO. GE-A2105
SCALE NONE
SHEET NO.

kaiwang 11/21/2019 2:23:52 PM CAHSRP.tbl CHSR_full_black.plt P:\575 HSR JM Civil - HNTB\06 CAD\Volume 3\CAD in_progress FJ\FJ-GE-A2105.dgn

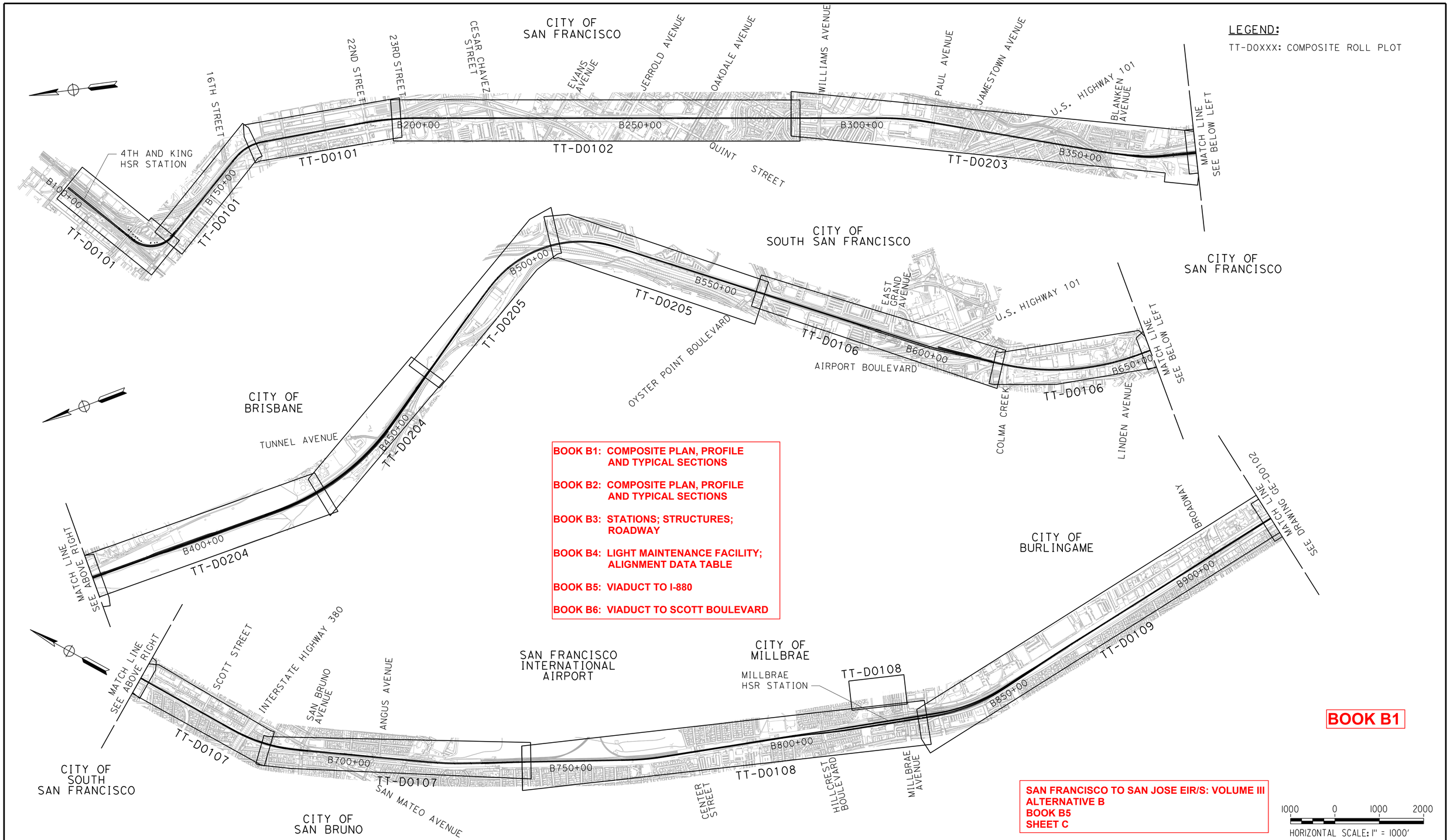

REV	DATE	BY	CHK	APP	DESCRIPTION

DESIGNED BY
DRAWN BY
CHECKED BY
IN CHARGE
DATE

RECORD PEPD SUBMITTAL

APRIL 11, 2019

NOT FOR CONSTRUCTION

HNTB
1111 Broadway
9th Floor
Oakland, CA 94607

CALIFORNIA High-Speed Rail Authority

CALIFORNIA HIGH-SPEED TRAIN PROJECT
SAN FRANCISCO TO SAN JOSE
ALTERNATIVE B
KEY MAP
COMPOSITE PLAN
SHEET 1 OF 4

CONTRACT NO. HSR15-34
DRAWING NO. GE-D2101
SCALE AS SHOWN
SHEET NO.

$FILE$ $PLTDRVS$ $PENTBLS$ $TIME$ $DATE$ $USER$

LEGEND:

TT-D0XXX: COMPOSITE ROLL PLOT

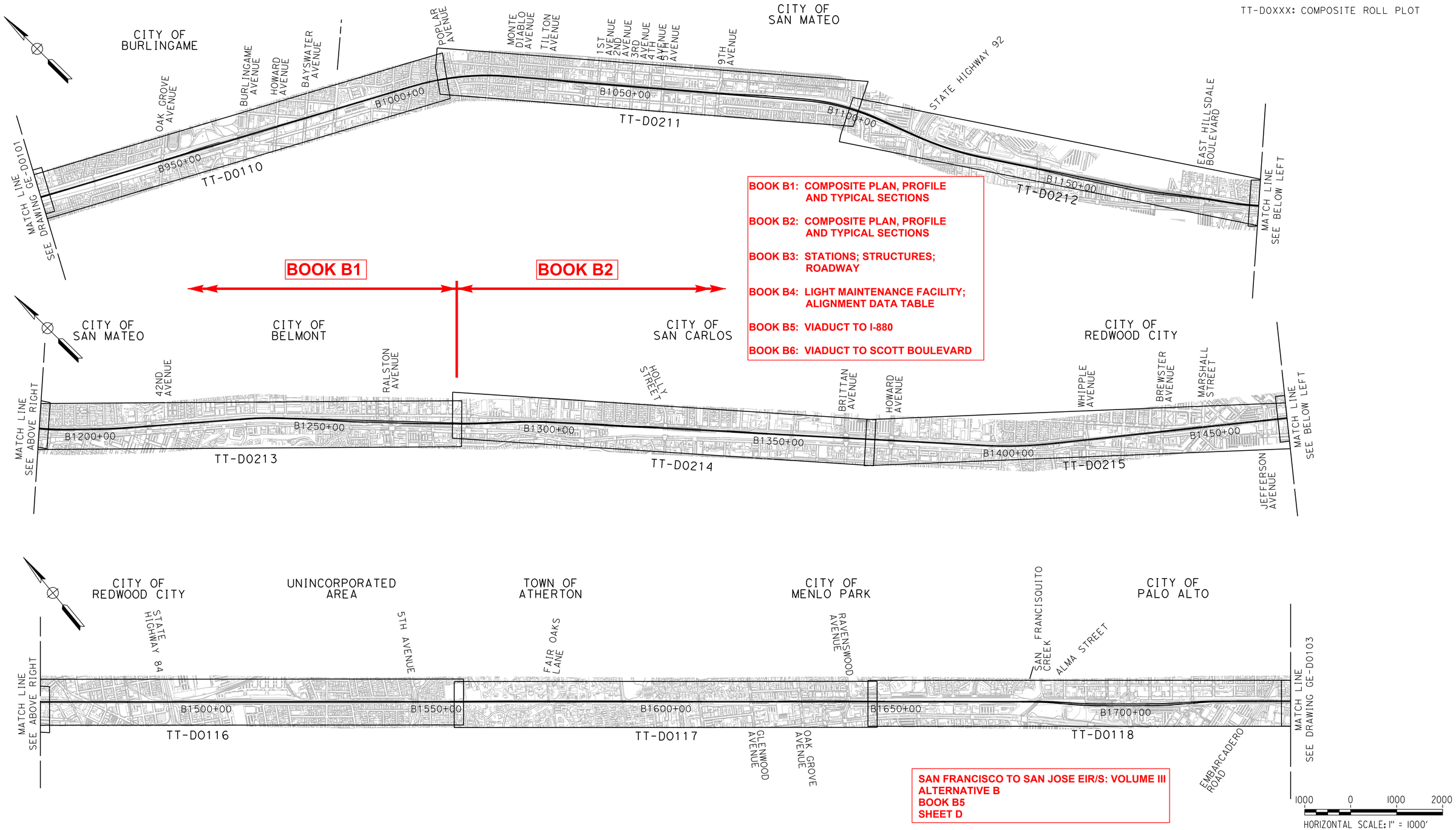

BOOK B1: COMPOSITE PLAN, PROFILE AND TYPICAL SECTIONS

BOOK B2: COMPOSITE PLAN, PROFILE AND TYPICAL SECTIONS

BOOK B3: STATIONS; STRUCTURES; ROADWAY

BOOK B4: LIGHT MAINTENANCE FACILITY; ALIGNMENT DATA TABLE

BOOK B5: VIADUCT TO I-880

BOOK B6: VIADUCT TO SCOTT BOULEVARD

SAN FRANCISCO TO SAN JOSE EIR/S: VOLUME III
ALTERNATIVE B
BOOK B5
SHEET D

REV	DATE	BY	CHK	APP	DESCRIPTION

DESIGNED BY
DRAWN BY
CHECKED BY
IN CHARGE
DATE

RECORD PEPD SUBMITTAL

APRIL 11, 2019

NOT FOR CONSTRUCTION

HNTB
1111 Broadway
9th Floor
Oakland, CA 94607

CALIFORNIA High-Speed Rail Authority

CALIFORNIA HIGH-SPEED TRAIN PROJECT
SAN FRANCISCO TO SAN JOSE
ALTERNATIVE B
KEY MAP
COMPOSITE PLAN
SHEET 2 OF 4

CONTRACT NO. HSR15-34
DRAWING NO. GE-D2102
SCALE AS SHOWN
SHEET NO.

$USER$ $DATE$ $TIME$ $PENTBLS$ $PLTDRVS$ $FILE$

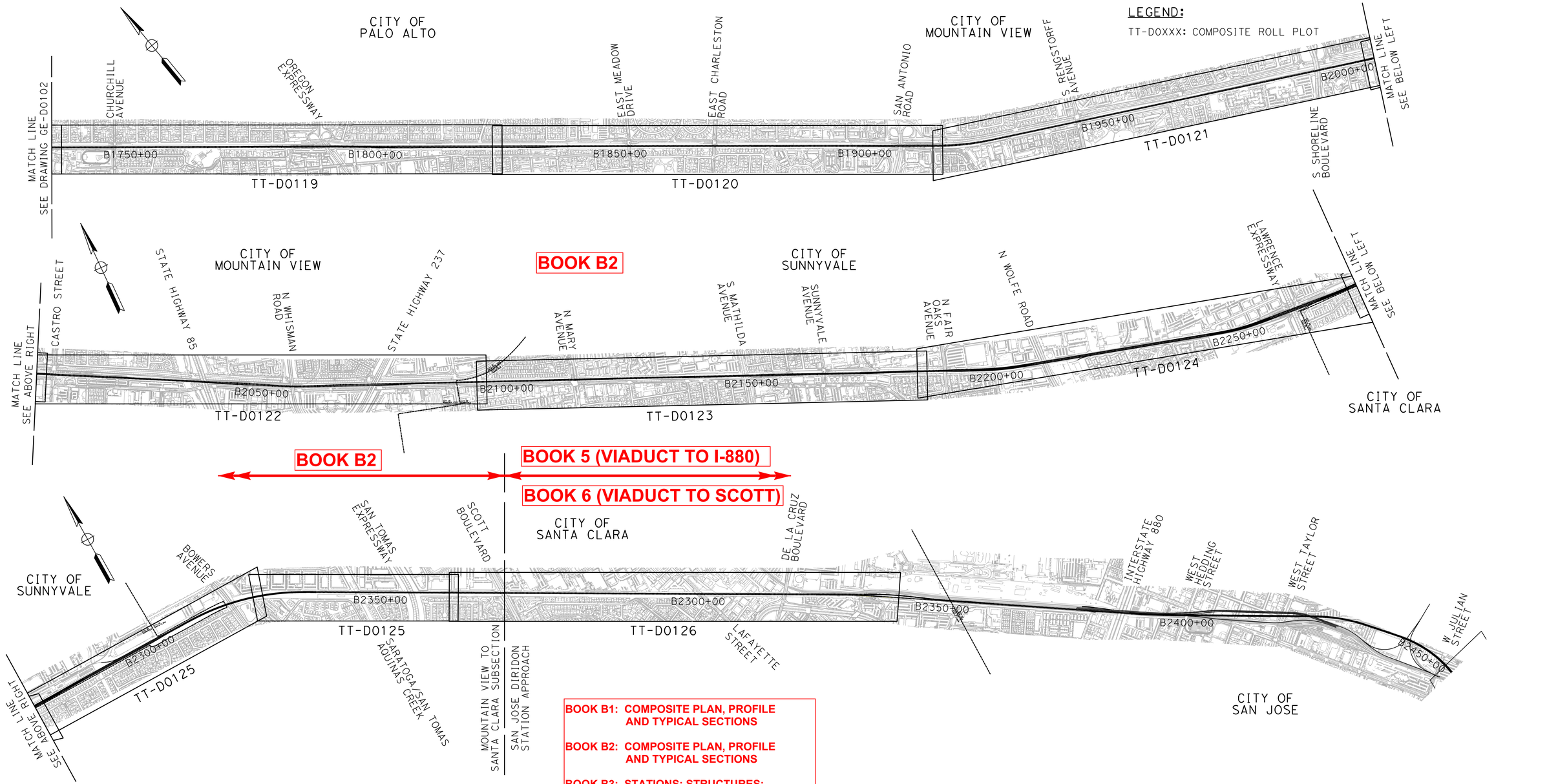

BOOK B1: COMPOSITE PLAN, PROFILE AND TYPICAL SECTIONS

BOOK B2: COMPOSITE PLAN, PROFILE AND TYPICAL SECTIONS

BOOK B3: STATIONS; STRUCTURES; ROADWAY

BOOK B4: LIGHT MAINTENANCE FACILITY; ALIGNMENT DATA TABLE

BOOK B5: VIADUCT TO I-880

BOOK B6: VIADUCT TO SCOTT BOULEVARD

SAN FRANCISCO TO SAN JOSE EIR/S: VOLUME III
ALTERNATIVE B
BOOK B5
SHEET E

1000 0 1000 2000
HORIZONTAL SCALE: 1" = 1000'

REV	DATE	BY	CHK	APP	DESCRIPTION

DESIGNED BY
DRAWN BY
CHECKED BY
IN CHARGE
DATE

RECORD PEPD SUBMITTAL

APRIL 11, 2019

NOT FOR CONSTRUCTION

HNTB
1111 Broadway
9th Floor
Oakland, CA 94607

CALIFORNIA High-Speed Rail Authority

CALIFORNIA HIGH-SPEED TRAIN PROJECT
SAN FRANCISCO TO SAN JOSE
ALTERNATIVE B
KEY MAP
COMPOSITE PLAN
SHEET 3 OF 4

CONTRACT NO. HSR15-34
DRAWING NO. GE-D2103
SCALE AS SHOWN
SHEET NO.

$FILE$ $PLTDRVS$ $PENTBLS$ $TIME$ $DATE$ $USER$

LEGEND:

TT-DOXXX: COMPOSITE ROLL PLOT

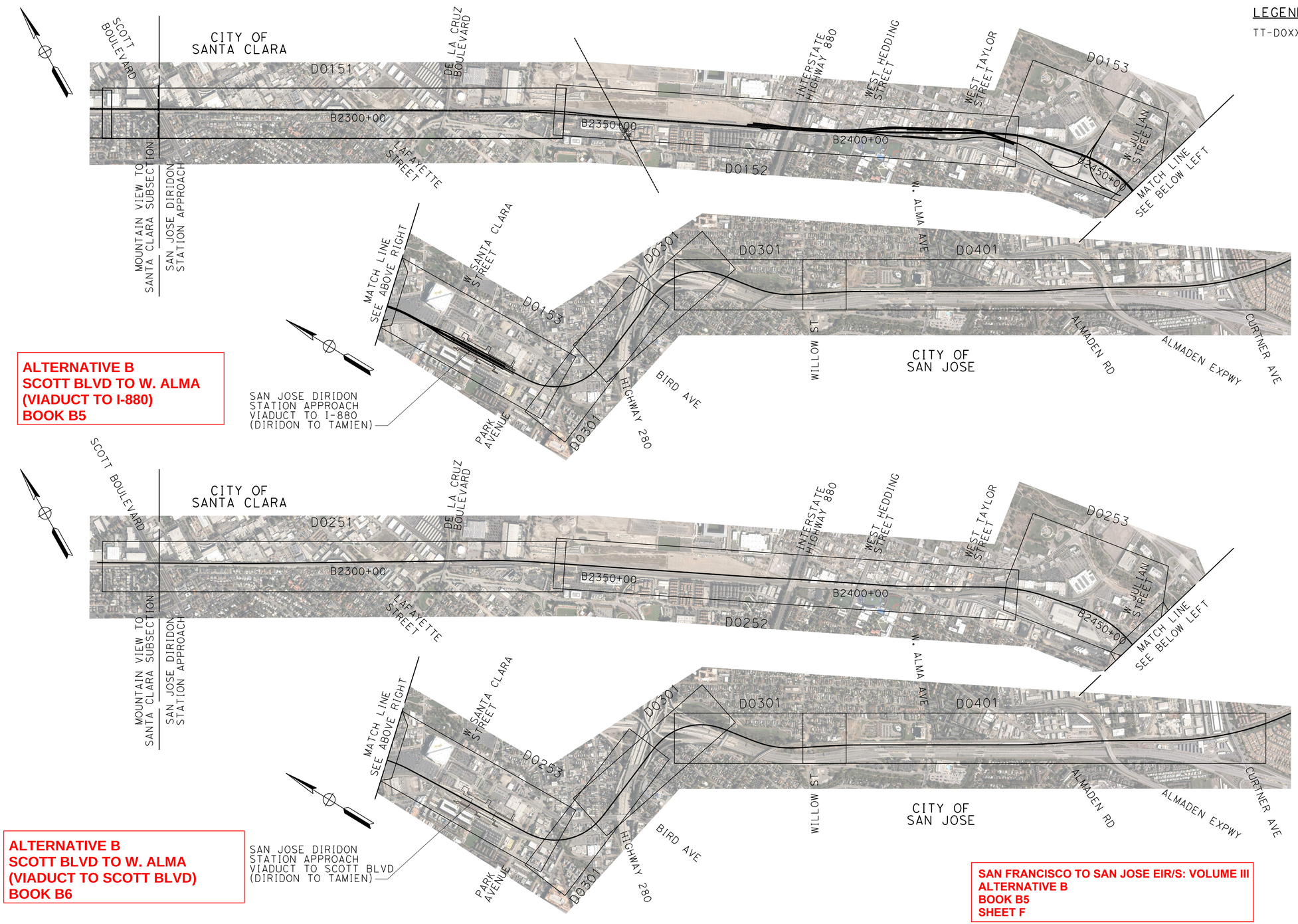

ALTERNATIVE B
SCOTT BLVD TO W. ALMA
(VIADUCT TO I-880)
BOOK B5

ALTERNATIVE B
SCOTT BLVD TO W. ALMA
(VIADUCT TO SCOTT BLVD)
BOOK B6

BOOK B1: COMPOSITE PLAN, PROFILE AND TYPICAL SECTIONS

BOOK B2: COMPOSITE PLAN, PROFILE AND TYPICAL SECTIONS

BOOK B3: STATIONS; STRUCTURES; ROADWAY

BOOK B4: LIGHT MAINTENANCE FACILITY; ALIGNMENT DATA TABLE

BOOK B5: VIADUCT TO I-880

BOOK B6: VIADUCT TO SCOTT BOULEVARD

SAN FRANCISCO TO SAN JOSE EIR/S: VOLUME III
ALTERNATIVE B
BOOK B5
SHEET F

1000 0 1000 2000
HORIZONTAL SCALE: 1" = 1000'

REV	DATE	BY	CHK	APP	DESCRIPTION

DESIGNED BY
DRAWN BY
CHECKED BY
IN CHARGE
DATE

RECORD PEPD SUBMITTAL

APRIL 11, 2019

NOT FOR CONSTRUCTION

HNTB
1111 Broadway
9th Floor
Oakland, CA 94607

CALIFORNIA High-Speed Rail Authority

CALIFORNIA HIGH-SPEED TRAIN PROJECT
SAN FRANCISCO TO SAN JOSE
ALTERNATIVE B
KEY MAP
COMPOSITE PLAN
SHEET 4 OF 4

CONTRACT NO. HSR15-34
DRAWING NO. GE-D2104
SCALE AS SHOWN
SHEET NO.

kaiwang 12/2/2019 11:27:07 AM CAHSRP.tbl CHSR_full_black.plt P:\575 HSR JM Civil - HNTB\06 CAD\Volume 3\CAD in_progress FJ\FJ-GE-D2104.dgn

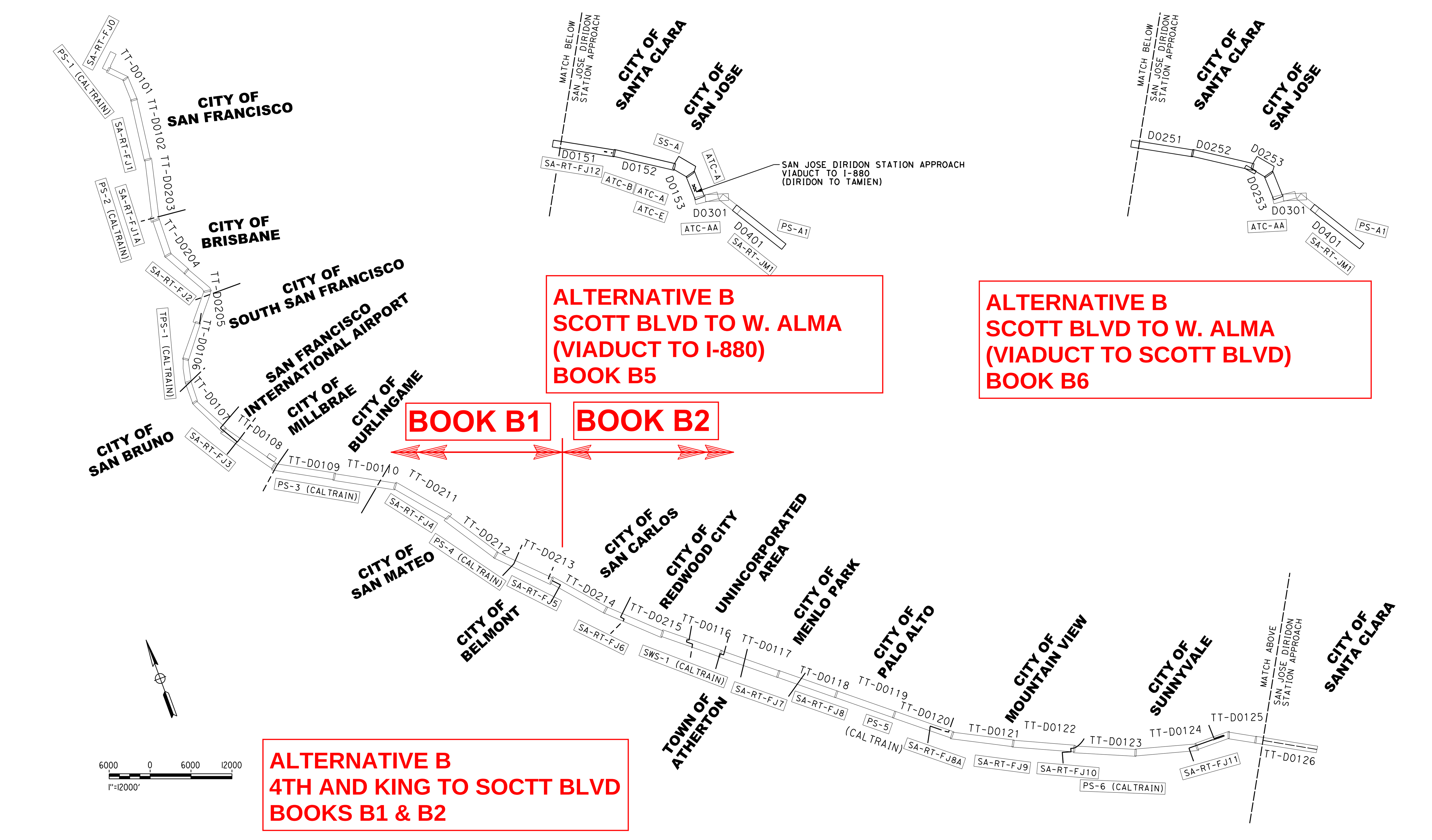

ALTERNATIVE B

Station (SB TRK)	Traction Power Facility (TPF)	TPD IF	Dist. to Prev. TPF (mi)	Automatic Train Control Sites	Dist. to Prev. ATC-D (mi)	Communications Radio Tower	Dist. to Prev. RT (mi)	Cross Street
104+63	4th & King Passenger Station					Radio Tower 4th & King Sta FJ0		4th St
133+15								
--	STATION EQUATION STA B133+15.12 = STA B139+00.00							
139+00								
162+58	Mariposa PS-1 (Caltrain)	PCEP-PS-1				Radio Tower PS-1 (Caltrain)		Mariposa St
--	To Caltrain PS-2		3.86			to RT 4th & King Sta FJ0	0.99	
167+09	CALTRAIN TUNNEL 1 - NORTH PORTAL							
185+27	CALTRAIN TUNNEL 1 - SOUTH PORTAL							
--								
198+80	CALTRAIN TUNNEL 2 - NORTH PORTAL							
209+69	CALTRAIN TUNNEL 2 - SOUTH PORTAL							
245+49						Stand Alone Radio Tower FJ1 - Alt 1		Jerrold Ave
--						to RT 4th & King Sta	2.56	
--						to RT PS-1	1.57	
258+78						Stand Alone Radio Tower FJ1 - Alt 2		Newcomb Ave
--						to RT 4th & King Sta	2.81	
--						to RT PS-1	1.82	
264+92	CALTRAIN TUNNEL 3 - NORTH PORTAL							
288+52	CALTRAIN TUNNEL 3 - SOUTH PORTAL							
322+20	CALTRAIN TUNNEL 4 - NORTH PORTAL							
357+57	CALTRAIN TUNNEL 4 - SOUTH PORTAL							
358+24	Beginning of Alternative B - West Brisbane							
358+50					Stand Alone Radio Tower FJ1A		Blanken Ave	
					to SA-RT FJ1 - Alt 1	2.14		
					to SA-RT FJ1 - Alt 2	1.89		
366+50	Bayshore PS-2 (Caltrain)						Recycle Road	Co-locate SAR at Caltrain site
--								
--								
467+30					Stand Alone Radio Tower FJ2 - Alt 1		Bayshore Boulevard	
--					to SA-RT FJ1A	2.06		
476+65					Stand Alone Radio Tower FJ2 - Alt 2		Bayshore Boulevard	
--					to SA-RT FJ1A	2.24		
539+86								
--	STATION EQUATION STA B539+85.68 = STA B545+00.00							
	End of Alternative B - West Brisbane. Conform with Alternative A.							
542+50								
585+00	South San Francisco TPS-1 (Caltrain)	PCEP-TPS-1				Radio Tower TPS-1 (Caltrain)		Grand Ave
--	To Caltrain PS-2		4.09			to SA-RT FJ2 - Alt 1	2.18	
--	To Caltrain PS-3		5.73			to SA-RT FJ2 - Alt 2	2.00	
	To Caltrain TPS-2		36.21					
662+50								
--	STATION EQUATION STA B662+50.02 = STA B665+00.00							
665+00								
741+43						Stand Alone Radio Tower FJ3 - Alt 1		San Marco Ave
--						to RT TPS-1	2.92	
745+23						Stand Alone Radio Tower FJ3 - Alt 2		Santa Lucia Ave
--						to RT TPS-1	2.99	
890+00	Broadway PS-3 (Caltrain)	PCEP-PS-3				Radio Tower PS-3 (Caltrain)		Lincoln Ave
--	To Caltrain TPS-1		5.73			to SA-RT FJ3 - Alt 1	2.81	
--	To Caltrain PS-4		5.48			to SA-RT FJ3 - Alt 2	2.74	
1038+91					Stand Alone Radio Tower FJ4 - Alt 1		Cypress Avenue	
--								
1046+13					Stand Alone Radio Tower FJ4 - Alt 2		2nd Avenue	
--								

ALTERNATIVE B (CONTINUED)

Station (SB TRK)	Traction Power Facility (TPF)	TPD IF	Dist. to Prev. TPF (mi)	Automatic Train Control Sites	Dist. to Prev. ATC-D (mi)	Communications Radio Tower	Dist. to Prev. RT (mi)	Cross Street
1071+00	Beginning of Alternative B - Short Middle 4-Track							
1179+32	Hillsdale PS-4 (Caltrain)				Radio Tower PS-4 (Caltrain)		E. Hillsdale Boulevard	Co-locate SAR at Caltrain site
--					to SA-RT FJ4 - Alt 1	2.66		
--					to SA-RT FJ4 - Alt 2	2.52		
1257+62					Stand Alone Radio Tower FJ5 - Alt 1		Middle Road	
--					to RT PS-4	1.48		
1269+19					Stand Alone Radio Tower FJ5 - Alt 2		Ralston Avenue	
--					to RT PS-4	1.70		
1383+23					Stand Alone Radio		El Camino	
--					to SA-RT FJ5 - Alt 1	2.38		
--					to SA-RT FJ5 - Alt 2	2.16		
1387+77					Stand Alone Radio Tower FJ6 - Alt 2		Center Street	
--					to SA-RT FJ5 - Alt 1	2.46		
--					to SA-RT FJ5 - Alt 2	2.25		
1419+97								
--	STATION EQUATION - STA B1419+97.30 = STA B1425+00.00							
	End of Alternative B - Short Middle 4-Track. Conform with Alternative A.							
1425+00								
1495+25	Redwood Junction SWS-1 (Caltrain)	PCEP-SWS-1				Radio Tower SWS-1 (Caltrain)		SR 84
--	To Caltrain PS-4		5.89			to SA-RT FJ6 - Alt 2	2.03	
--	To Caltrain PS-5		5.81			to SA-RT FJ6 - Alt 1	1.94	
	To Caltrain TPS-1		17.10					
	To Caltrain TPS-2		19.11					
1627+06						Stand Alone Radio Tower FJ7 - Alt 1		Derby lane
--						to RT SWS-1	2.50	
1638+84						Stand Alone Radio Tower FJ7 - Alt 2		Ravenswood Avenue
--						to RT SWS-1	2.72	
1725+76						Stand Alone Radio Tower FJ8 - Alt 1		Addison Avenue
--						to SA-RT FJ7 - Alt 1	1.87	
--						to SA-RT FJ7 - Alt 2	1.65	
1728+64						Stand Alone Radio Tower FJ8 - Alt 2		Embarcadero Road
--						to SA-RT FJ7 - Alt 1	1.92	
--						to SA-RT FJ7 - Alt 2	1.70	
1801+90	West Meadow PS-5 (Caltrain)	PCEP-PS-5						
--	To Caltrain SWS-1		5.81					
	To Caltrain PS-6		6.69					
1861+61						Stand Alone Radio Tower FJ8A - Alt 2		E. Charleston Raod
--						to SA-RT FJ8 - Alt 1	2.57	
--						to SA-RT FJ8 - Alt 2	2.52	
1865+41						Stand Alone Radio Tower FJ8A - Alt 1		Park Boulevard
--						to SA-RT FJ8 - Alt 1	2.64	
--						to SA-RT FJ8 - Alt 2	2.59	
1991+97						Stand Alone Radio Tower FJ9 - Alt 1		N. Shoreline Boulevard
--						to SA-RT FJ8A - Alt 2	2.47	
--						to SA-RT FJ8A - Alt 1	2.40	
1998+51						Stand Alone Radio Tower FJ9 - Alt 2		N. Shoreline Boulevard
--						to SA-RT FJ8A - Alt 1	2.52	
--						to SA-RT FJ8A - Alt 2	2.59	
2091+76						Stand Alone Radio Tower FJ10 - Alt 1		E. Bernardo Avenue
--						to SA-RT FJ9 - Alt 1	1.89	
--						to SA-RT FJ9 - Alt 2	1.77	
2093+59						Stand Alone Radio Tower FJ10 - Alt 2		E. Bernardo Avenue
--						to SA-RT FJ9 - Alt 1	1.92	
--						to SA-RT FJ9 - Alt 2	1.80	
2154+99	Sunnyvale PS-6 (Caltrain)	PCEP-PS-6				Radio Tower PS-6 (Caltrain)		Mathilda Avenue
--	To Caltrain PS-5		6.69			to SA-RT FJ10 - Alt 1	1.20	
--	To Caltrain TPS-2		6.62			to SA-RT FJ10 - Alt 2	1.16	
2268+87						Stand Alone Radio Tower FJ11 - Alt 1		Lawrence Expressway
--						to RT PS-6	2.16	
2290+53						Stand Alone Radio Tower FJ11 - Alt 2		Lawrence Expressway
--						to RT PS-6	2.57	
2375+19								
	End of San Francisco to San Jose Section (FJ)							
--	SCOTT BOULEVARD							

ALTERNATIVE B (SCOTT BLVD TO W. ALMA) (VIADUCT TO I-880)

Station (SB TRK)	Traction Power Facility (TPF)	TPF ID	Dist. to Prev. TPF (mi)	Automatic Train Control Sites	Dist. to Prev. ATC-D (mi)	Communications Radio Tower	Dist. to Prev. RT (mi)	Cross Street
2260+00	SCOTT BOULEVARD							
2262+13						Stand Alone Radio Tower FJ12 - Alt 1		
--						to SA-RT FJ11 - Alt 1	2.05	
--						to SA-RT FJ11 - Alt 2	1.64	
2287+08						Stand Alone Radio Tower FJ12 - Alt 2		
--						to SA-RT FJ11 - Alt 1	2.52	
--						to SA-RT FJ11 - Alt 2	2.11	
2389+50	Caltrain PCEP TPS-2 - Alt 1	--				Radio Tower SS-A - Alt 1		
--						to SA-RT FJ12 - Alt 1	2.41	
--						to SA-RT FJ12 - Alt 2	1.94	
2391+87	Substation A (HSR) - ALT2	B-SS-STO (Alt 2)				Radio Tower SS-A - Alt 2		Stockton Ave.
--						to SA-RT FJ12 - Alt 1	2.46	
--						to SA-RT FJ12 - Alt 2	1.98	
2393+77				House at Interlocking Site B				
2394+72				House at Interlocking Site A		RT Interlocking Site A SCT-DRDN - Alt 3		
--						to SA-RT FJ12 - Alt 1	2.51	
--						to SA-RT FJ12 - Alt 2	2.04	
2464+32				House at Interlocking Site E		Radio Tower Interlocking Site E - Alt 1		
--						Caltrain PCEP TPS-2 - Alt 1	1.42	
--						to Substation A (HSR)	1.37	
--						to RT Interlocking Site A - Alt 3	1.32	
2476+00	Diridon Passenger Station							
2481+15	End of San Francisco to San Jose Section (FJ) - Scott to Diridon Subsection							
	Station Equation FJ ALT. A (NRRW) POE 2481+15.17 (SB) = DRDN-TAMI POB 52+90.53 (SB)							
52+91	Beginning of San Jose to Merced Section (JM) - Diridon to Tamien Subsection							
66+10				House at Interlocking Site B				
77+33				House at Interlocking Site A		Radio Tower Interlocking Site A - Alt 3		
--						Caltrain PCEP TPS-2 - Alt 1	2.20	
--						to Substation A (HSR)	2.15	
--						to RT Interlocking Site A SCT-DRDN- Alt 3	2.10	
--						to RT Interlocking E - Alt 1	0.78	
91+21				House at Interlocking Site AA		Radio Tower Interlocking Site AA - Alt 4		
--						Caltrain PCEP TPS-2 - Alt 1	2.46	
--						to Substation A (HSR)	2.42	
						to RT Interlocking Site A SCT-DRDN- Alt 3	2.36	
--						to RT Interlocking Site E - Alt 1	1.04	
--						to RT Interlocking Site A - Alt 3	0.26	
150+00	End of Diridon to Tamien Subsection							

ALTERNATIVE B (SCOTT BLVD TO W. ALMA) (VIADUCT TO SCOTT BLVD)

Station (SB TRK)	Traction Power Facility (TPF)	TPF ID	Dist. to Prev. TPF (mi)	Automatic Train Control Sites	Dist. to Prev. ATC-D (mi)	Communications Radio Tower	Dist. to Prev. RT (mi)	Cross Street
2260+00	SCOTT BOULEVARD							
2261+60				House at Interlocking Site A		Radio Tower Interlocking Site A		
--						to SA-RT FJ11 - Alt 1	2.04	
--						to SA-RT FJ11 - Alt 2	1.63	
2289+59				House at Interlocking Site B				
2389+15	Caltrain PCEP TPS-2 - Alt 1	--				Radio Tower SS-A - Alt 1		
--						to RT Interlocking Site A	2.42	
2391+52	Substation A (HSR) - ALT2	B-SS-STO (Alt 2)				Radio Tower SS-A - Alt 2		Stockton Ave.
--						to RT Interlocking Site A	2.46	
--								
2463+97				House at Interlocking Site E		Radio Tower Interlocking Site E - Alt 1		
--						to Caltrain PCEP TPS-2 - Alt 1	1.42	
--						to Substation A (HSR)	1.37	
2476+07	Diridon Passenger Station							
2480+81	End of Scott to Diridon Subsection							
	Station Equation FJ - ALT. B (WIDE) POE 2480+80.58 (SB) = DRDN-TAMI POB 52+90.53 (SB)							
52+91	Beginning of Diridon to W. Alma Subsection							
66+10				House at Interlocking Site B				
77+33				House at Interlocking Site A		Radio Tower Interlocking Site A - Alt 3		
--						to Caltrain PCEP TPS-2 - Alt 1	2.20	
--						to Substation A (HSR)	2.15	
91+34				House at Interlocking Site AA		Radio Tower Interlocking Site AA - Alt 4		
--						to Caltrain PCEP TPS-2 - Alt 1	2.46	
--						to Substation A (HSR)	2.42	
--						to RT Interlocking Site E - Alt 1	1.05	
--						to RT Interlocking Site A - Alt 3	0.27	
150+00	End of Diridon to Tamien Subsection							

SAN FRANCISCO TO SAN JOSE EIR/S: VOLUME III
ALTERNATIVE B
BOOK B5
SHEET G

RECORD PEPD SUBMITTAL
APRIL 11, 2019
NOT FOR CONSTRUCTION

HNTB
1111 Broadway
9th Floor
Oakland, CA 94607

CALIFORNIA High-Speed Rail Authority

CALIFORNIA HIGH-SPEED TRAIN PROJECT
SAN FRANCISCO TO SAN JOSE
ALTERNATIVE B
KEY MAP
SYSTEM SITES

CONTRACT NO. HSR15-34
DRAWING NO. GE-D2105
SCALE AS SHOWN
SHEET NO.

CITY OF SANTA CLARA

PLAN
SCALE: 1"=200'

PROFILE
SCALE: 1"=200' HOR, 1"=100' VERT

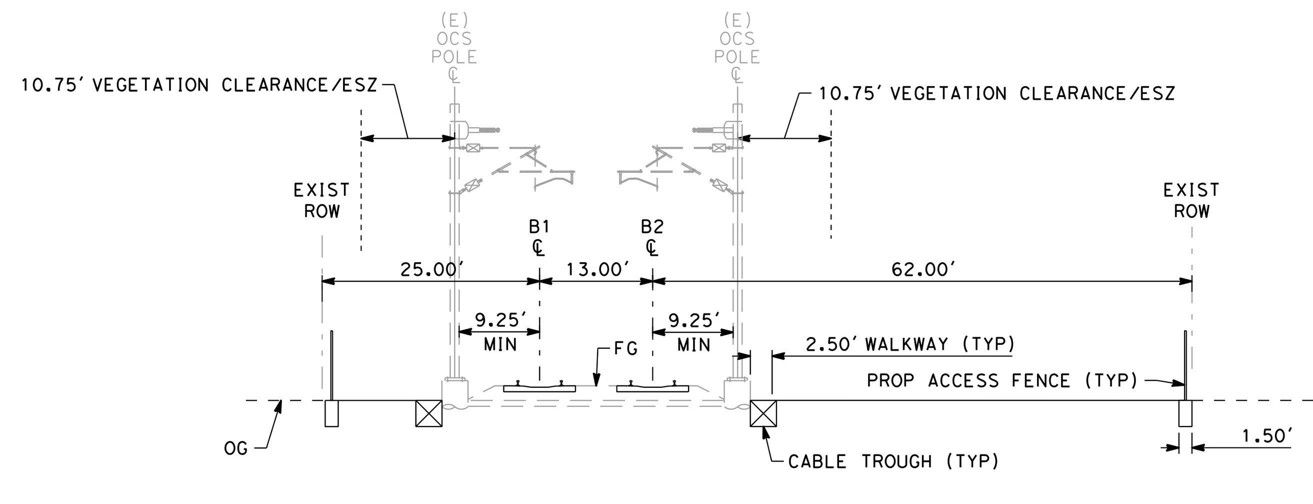

EXISTING AT-GRADE 2 TRACK
SCALE: 1"=20'
"B" 2275+00

NOTE:

1. REFER TO GENERAL NOTES SHEETS GE-B0001 AND GE-B0002 FOR NOTES.

SAN FRANCISCO TO SAN JOSE EIR/S: VOLUME III
ALTERNATIVE B
BOOK B5
SHEET 83 OF 142

RECORD PEPD SUBMITTAL APRIL 11, 2019 NOT FOR CONSTRUCTION	HNTB 1111 Broadway 9th Floor Oakland, CA 94607	CALIFORNIA High-Speed Rail Authority	CALIFORNIA HIGH-SPEED TRAIN PROJECT SAN JOSE TO MERCED SAN JOSE DIRIDON STATION APPROACH VIADUCT TO I-880 COMPOSITE PLAN, PROFILE AND CROSS SECTIONS B2365+00 TO B2340+00	CONTRACT NO. HSR15-34 DRAWING NO. TT-D0151 SCALE AS SHOWN SHEET NO.

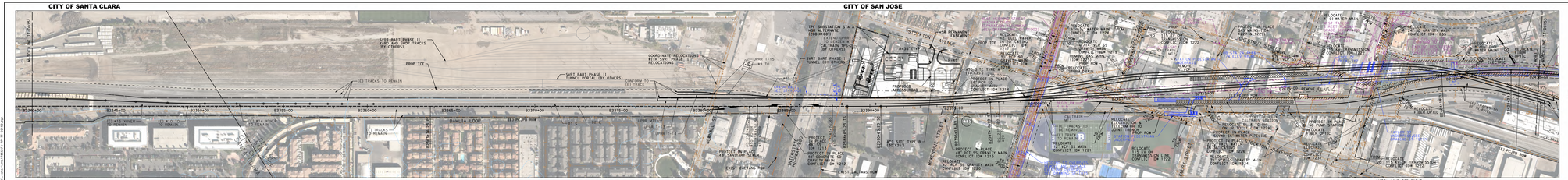

PLAN
SCALE: 1"=200'

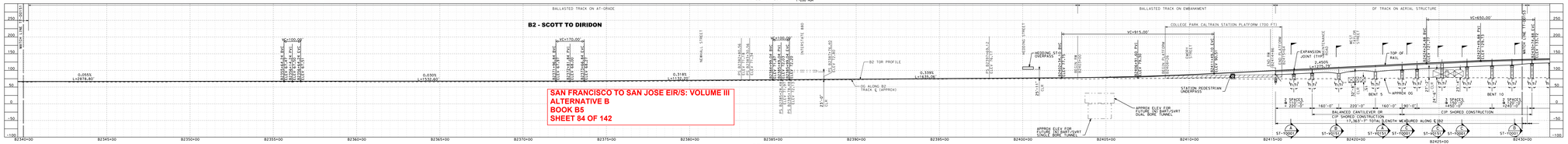

SAN FRANCISCO TO SAN JOSE EIR/S: VOLUME III
ALTERNATIVE B
BOOK B5
SHEET 84 OF 142

PROFILE
SCALE: 1"=200' HOR, 1"=100' VERT

NOTE:
1. REFER TO GENERAL NOTES SHEETS GE-B0001 AND GE-B0002 FOR NOTES.

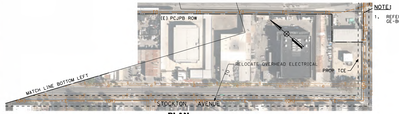

PLAN
SCALE: 1"=200'

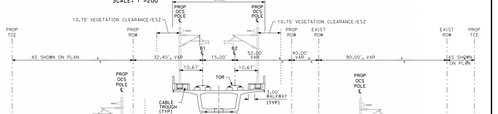

VIADUCT 2 TRACK (NORTH DIRIDON AREA)
SCALE: 1"=20'
"B" 2414+88 TO "B" 2425+00

RECORD PDFO SUBMITTAL APRIL 11, 2019 NOT FOR CONSTRUCTION	HNTB 111 Broadway Suite 1500 Oakland, CA 94607	CALIFORNIA High-Speed Rail Authority	CALIFORNIA HIGH-SPEED TRAIN PROJECT SAN JOSE TO MERCED SAN JOSE DIRIDON STATION APPROACH VIADUCT TO I-880 COMPOSITE PLAN, PROFILE AND CROSS SECTIONS B2340+00 TO B2430+00
			CONTRACT NO. HSR15-34 TASK ORDER NO. T7-00152 SCALE: AS SHOWN SHEET 84

CITY OF SAN JOSE

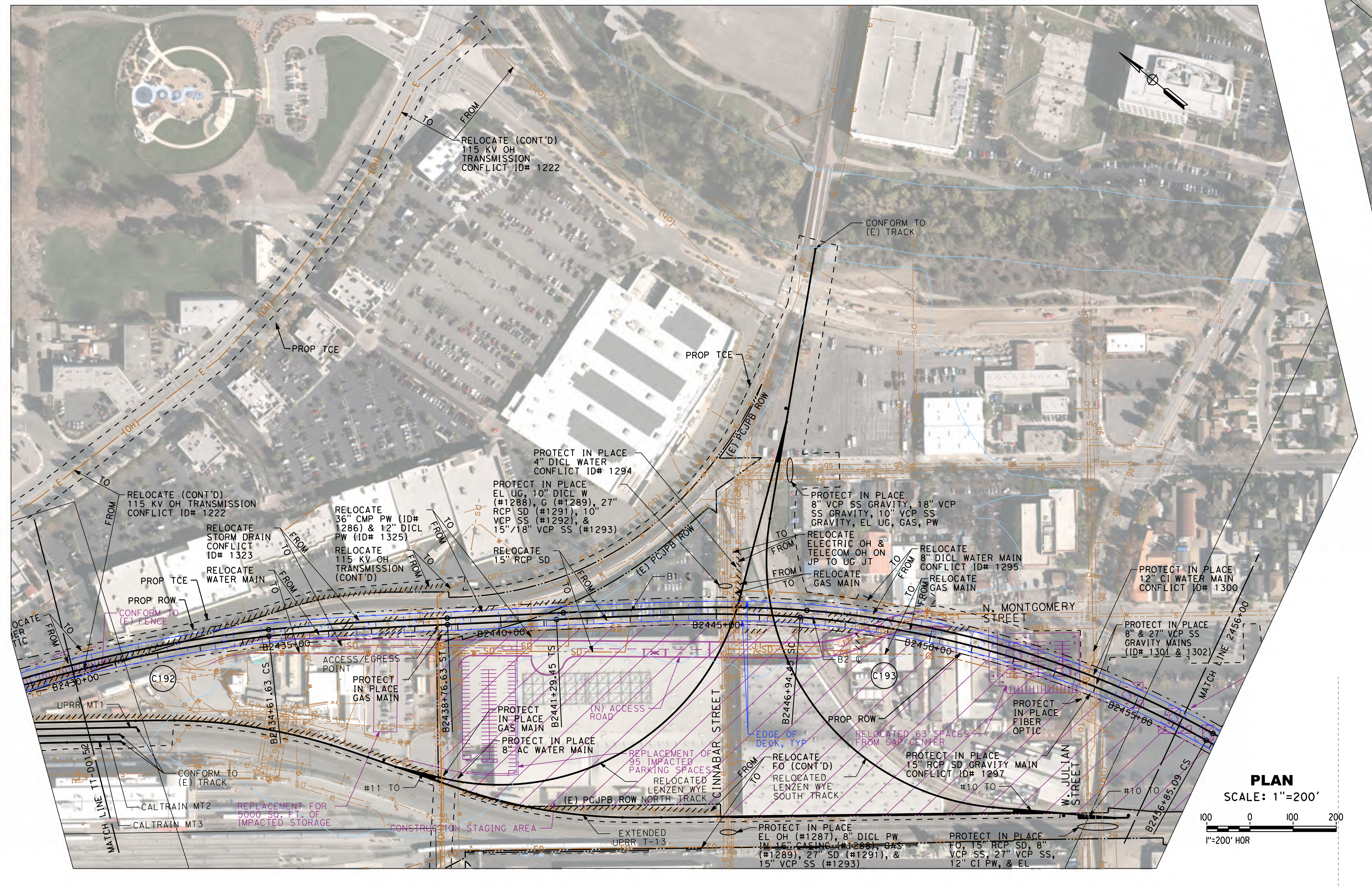

CITY OF SAN JOSE

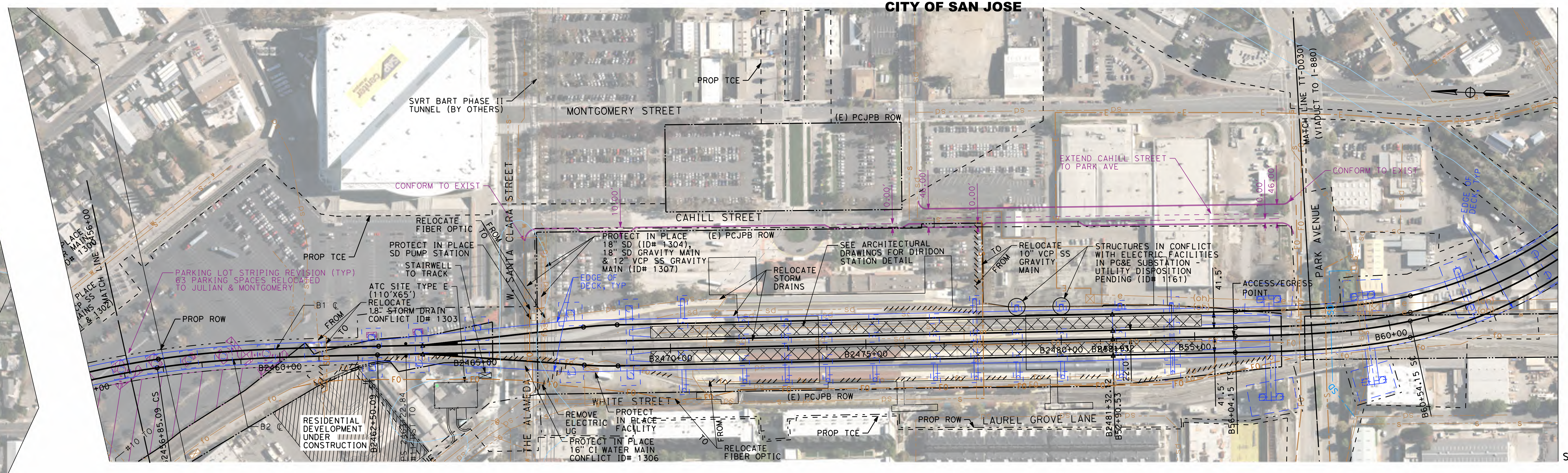

PLAN
SCALE: 1"=200'

PROFILE
SCALE: 1"=200' HOR, 1"=100' VERT

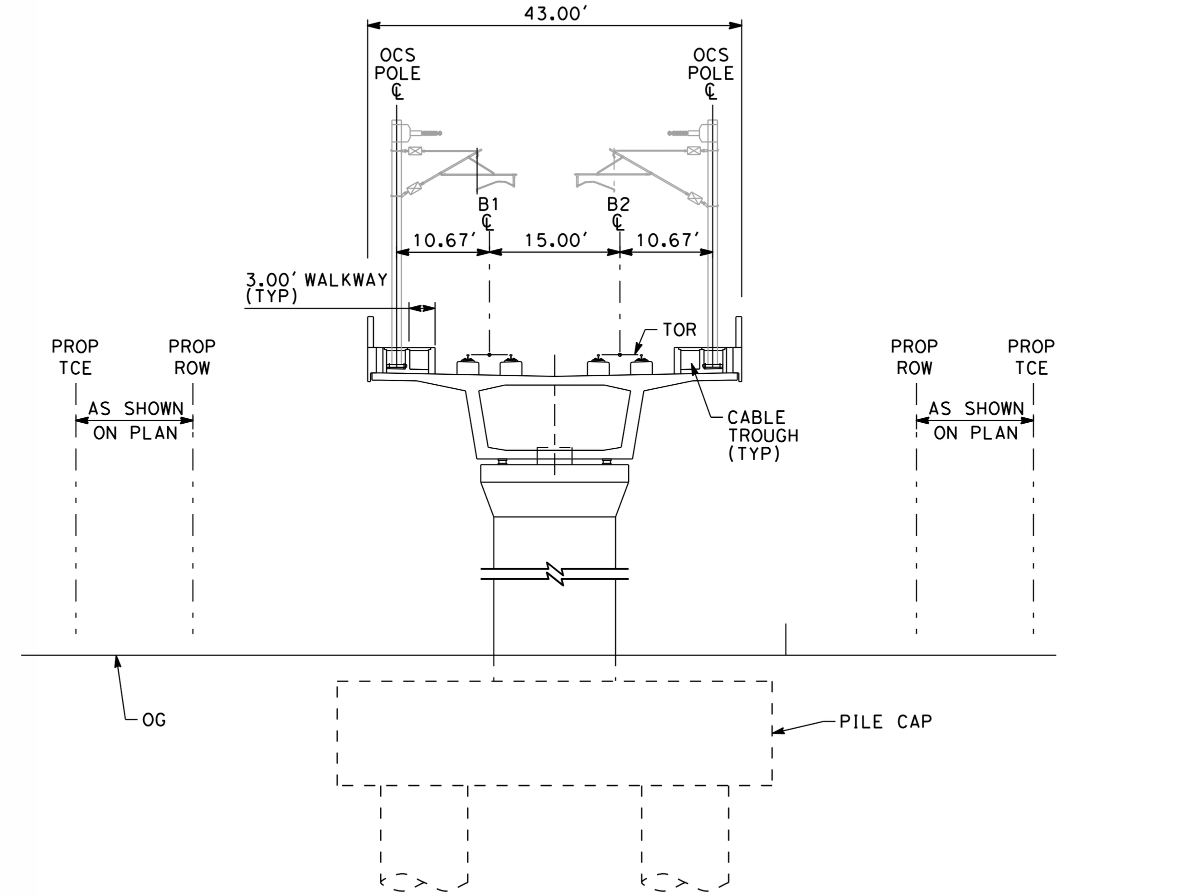

VIADUCT 2 TRACK (DIRIDON AREA)
"B" 2425+00 TO "B" 2463+22

NOTE:
1. REFER TO GENERAL NOTES SHEETS GE-B0001 AND GE-B0002 FOR NOTES.

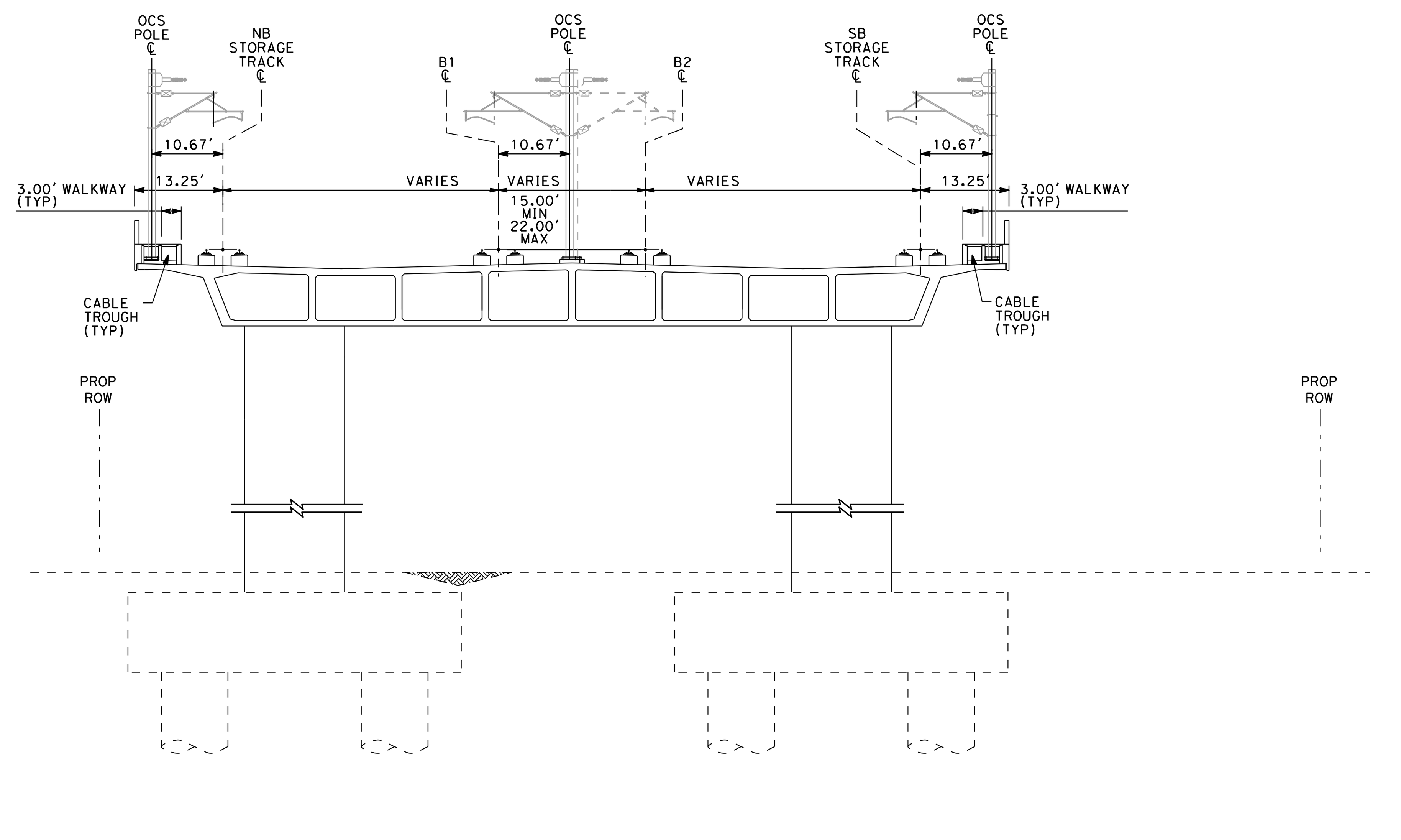

VIADUCT 4 TRACK (NORTH DIRIDON AREA)
SCALE: 1"=20'
"B" 2463+22 TO "B" 2481+32

SAN FRANCISCO TO SAN JOSE EIR/S: VOLUME III
ALTERNATIVE B
BOOK B5
SHEET 85 OF 142

RECORD PEPD SUBMITTAL APRIL 11, 2019 NOT FOR CONSTRUCTION	HNTB 1111 Broadway 9th Floor Oakland, CA 94607	CALIFORNIA High-Speed Rail Authority	CALIFORNIA HIGH-SPEED TRAIN PROJECT SAN JOSE TO MERCED SAN JOSE DIRIDON STATION APPROACH VIADUCT TO I-880 COMPOSITE PLAN, PROFILE AND CROSS SECTIONS B2430+00 TO B58+00	CONTRACT NO. HSR15-34 DRAWING NO. TT-D0153 SCALE AS SHOWN SHEET NO.

rdeleon 5/3/2019 3:20:38 PM CAHSRP.tbl cvd_pdf_bw.pltcfg c:\cadd\ib\pw\rdeleon\46037_cahsr\dms17856\FJ-RP-TT-D0153.dgn

CITY OF SAN JOSE

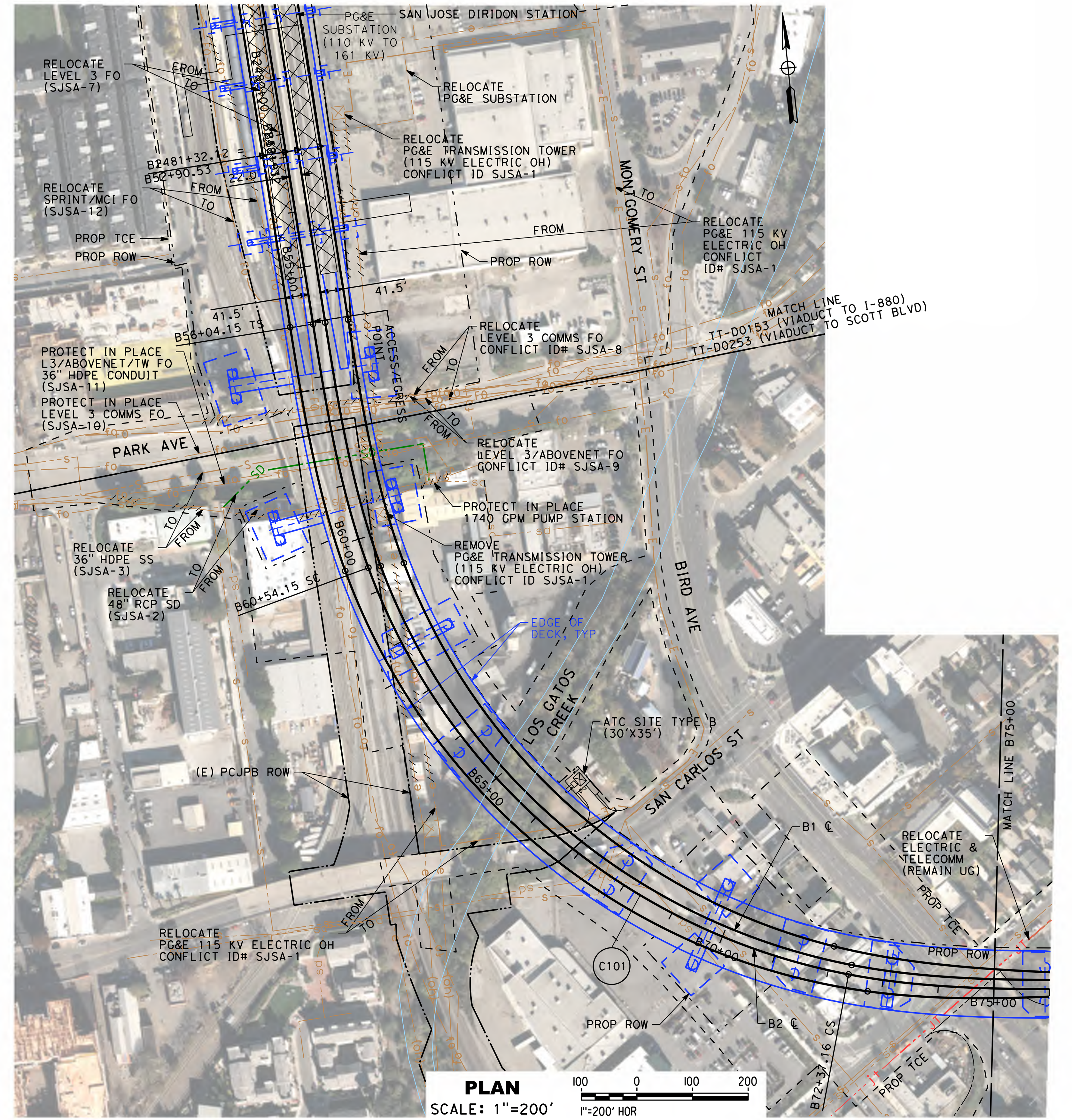

PLAN
SCALE: 1"=200'

SANTA CLARA COUNTY

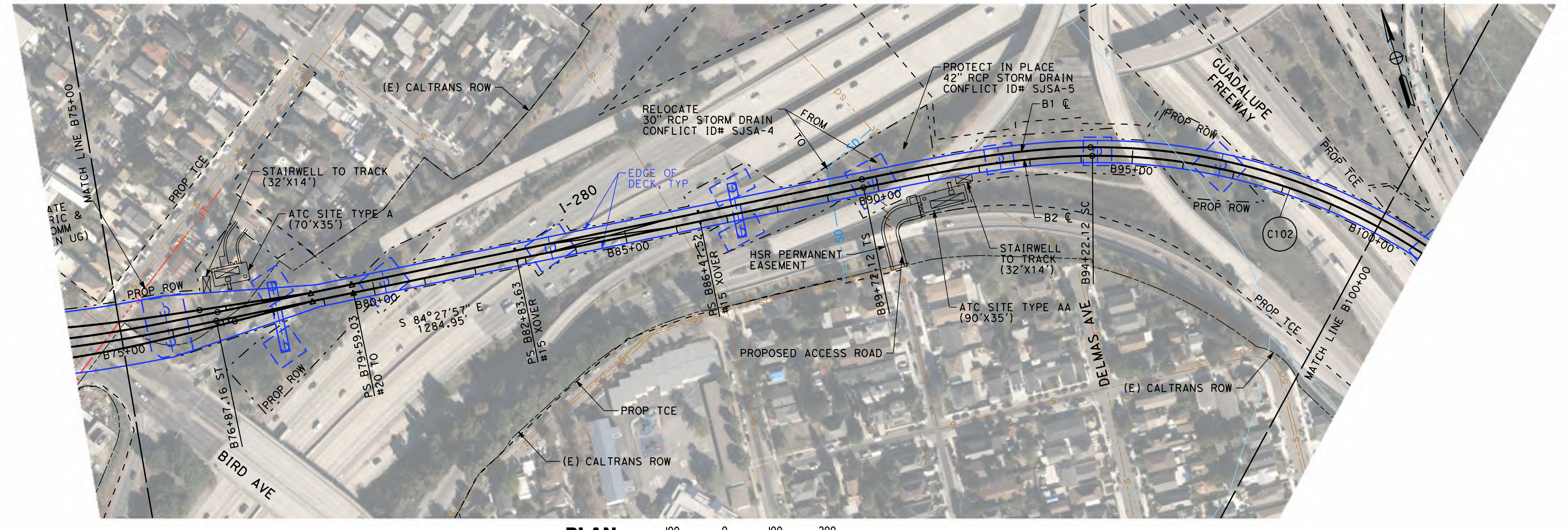

PLAN
SCALE: 1"=200'

CITY OF SAN JOSE

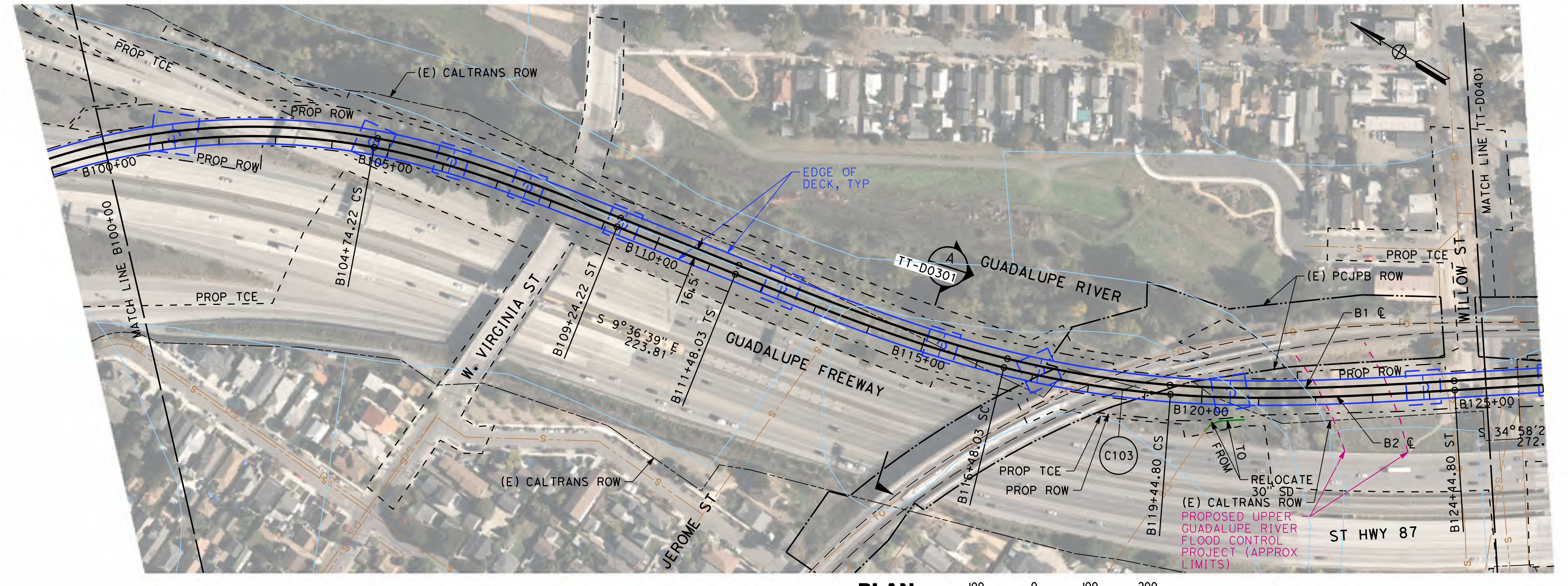

PLAN
SCALE: 1"=200'

PROFILE
SCALE: 1"=200' HOR, 1"=100' VERT

NOTE:

1. REFER TO GENERAL NOTES SHEETS GE-B0001 AND GE-B0002 FOR NOTES.

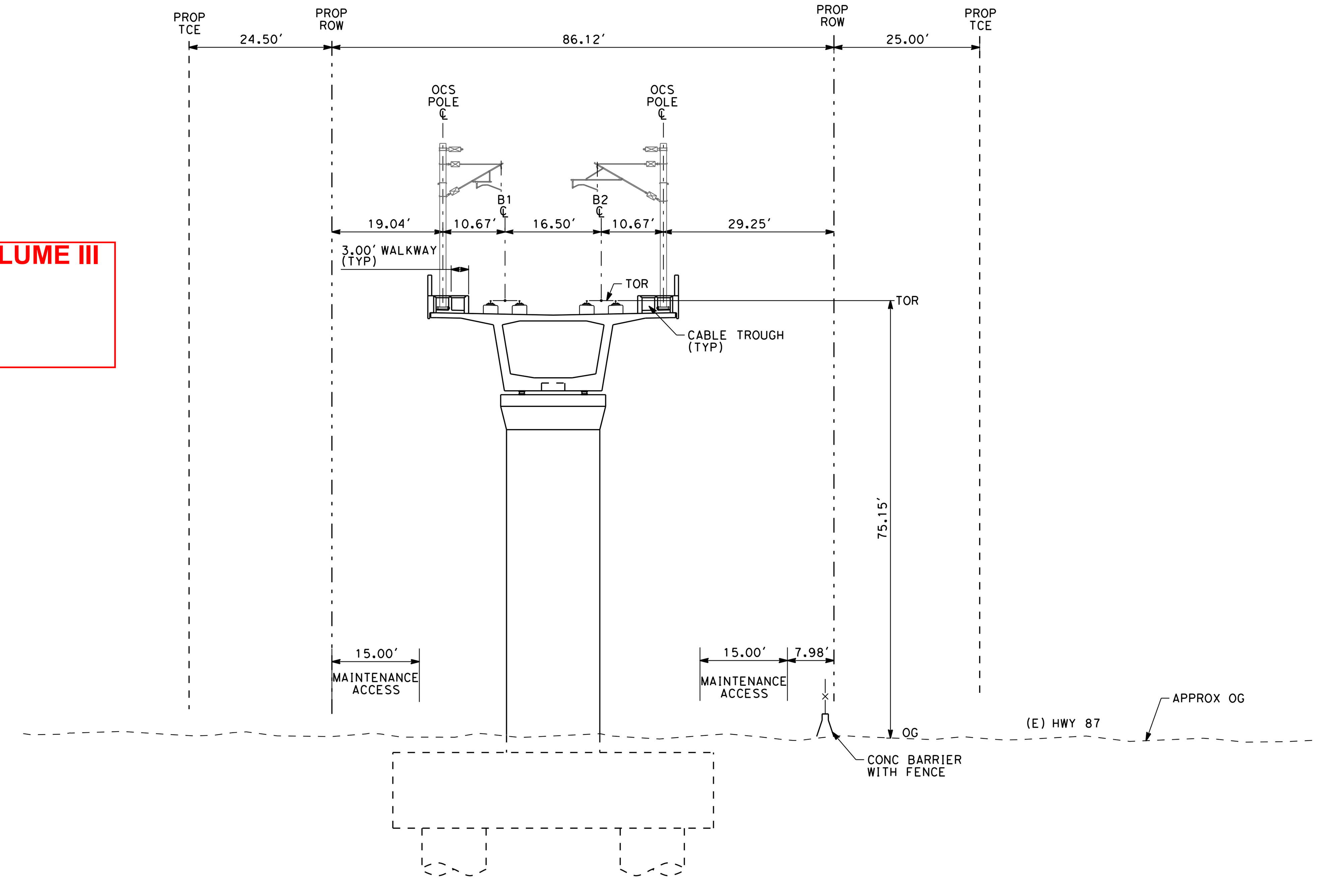

SECTION A
SCALE: 1"=20'
"B" 115+00

SAN FRANCISCO TO SAN JOSE EIR/S: VOLUME III
ALTERNATIVE B
BOOK B5
SHEET 86 OF 142

RECORD PEPD SUBMITTAL

APRIL 11, 2019

NOT FOR CONSTRUCTION

HNTB
1111 Broadway
9th Floor
Oakland, CA 94607

CALIFORNIA High-Speed Rail Authority

CALIFORNIA HIGH-SPEED TRAIN PROJECT
SAN JOSE TO MERCED
SAN JOSE DIRIDON STATION APPROACH
VIADUCT TO I-880
COMPOSITE PLAN, PROFILE AND CROSS SECTIONS
B58+00 TO B125+00

CONTRACT NO. HSR15-34
DRAWING NO. TT-D0301
SCALE AS SHOWN
SHEET NO.

PLAN
SCALE: 1"=200'

PROFILE
SCALE: 1"=200' HOR, 1"=100' VERT

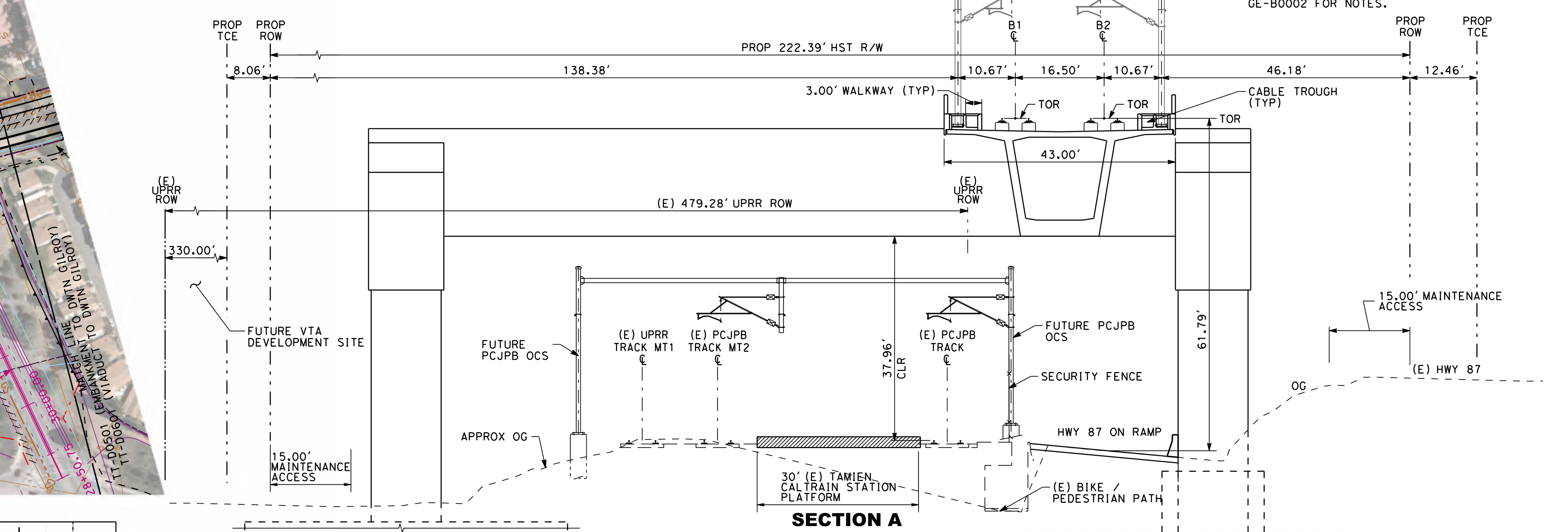

SECTION A
SCALE: 1"=20'
"B" 137+00

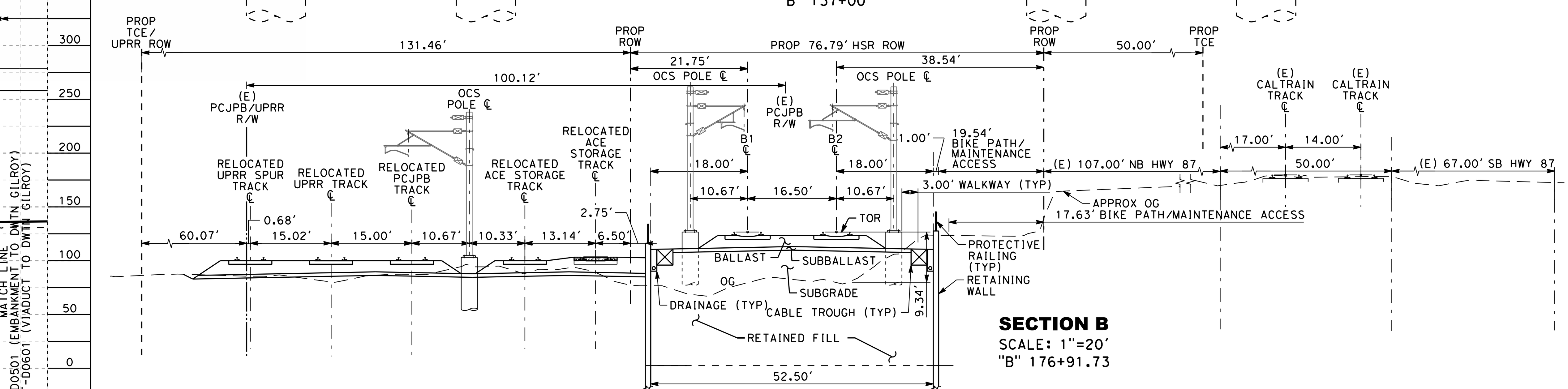

SECTION B
SCALE: 1"=20'
"B" 176+91.73

NOTE:
1. REFER TO GENERAL NOTES SHEETS GE-B0001 AND GE-B0002 FOR NOTES.

SAN FRANCISCO TO SAN JOSE EIR/S: VOLUME III
ALTERNATIVE B
BOOK B5
SHEET 87 OF 142

RECORD PEPD SUBMITTAL
APRIL 11, 2019
NOT FOR CONSTRUCTION

HNTB
1111 Broadway
9th Floor
Oakland, CA 94607

CALIFORNIA High-Speed Rail Authority

CALIFORNIA HIGH-SPEED TRAIN PROJECT
SAN JOSE TO MERCED
MONTEREY CORRIDOR
VIADUCT/AT-GRADE
COMPOSITE PLAN, PROFILE AND CROSS SECTIONS
B125+00 TO B211+00

CONTRACT NO.	HSR15-34
DRAWING NO.	TT-D0401
SCALE	AS SHOWN
SHEET NO.	

rdeleon 4/30/2019 2:51:52 PM CAHSRR.tbl cvd_pdf_bw.pltcfg c:\cadd\lib\pw\rdeleon\46037_cahsr\dms17596\JM-RP-TT-D0401.dgn

SAN FRANCISCO TO SAN JOSE EIR/S: VOLUME III
ALTERNATIVE B
BOOK B5
SHEET 88 OF 142

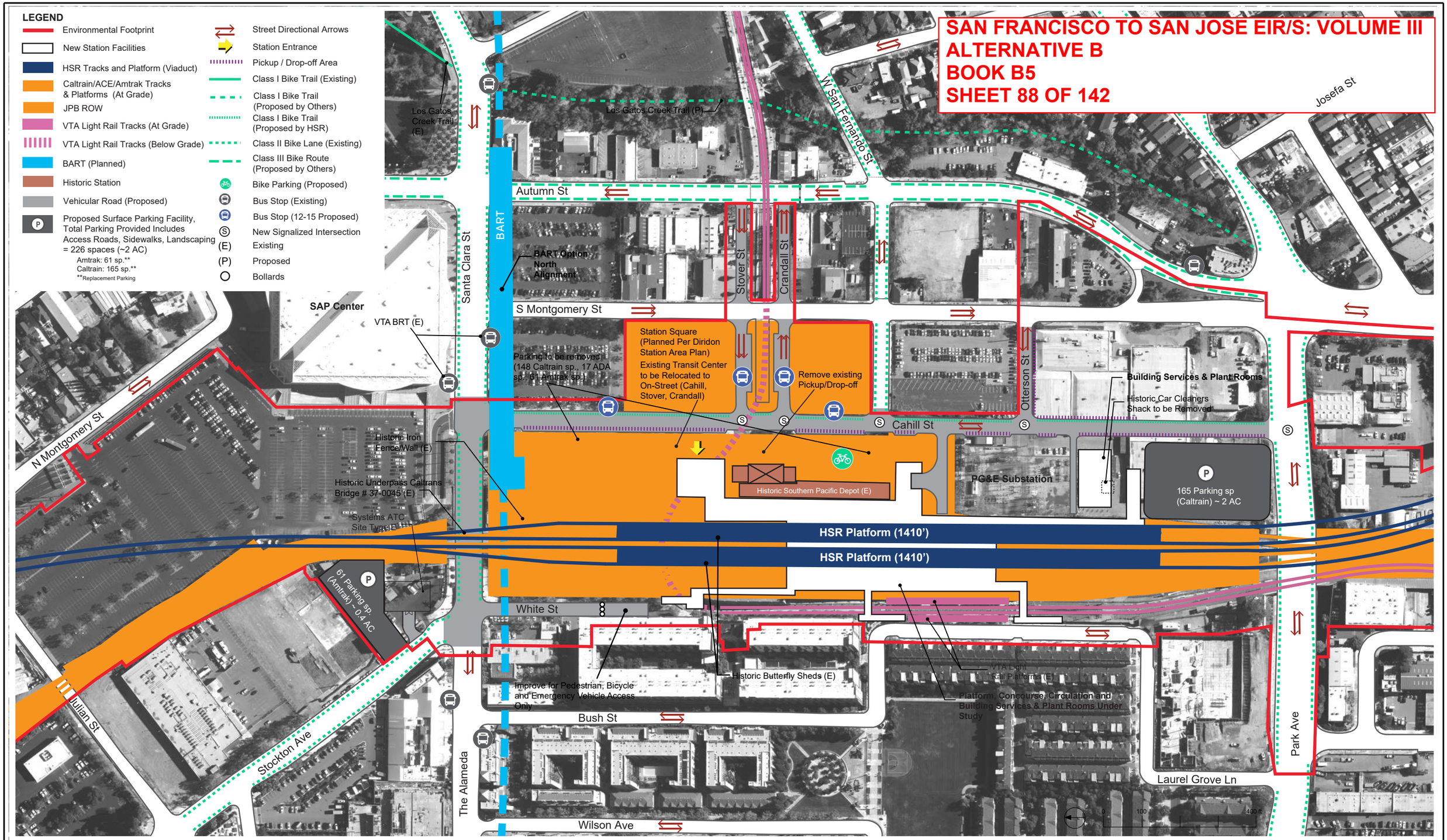

REV	DATE	BY	CHK	APP	DESCRIPTION

DESIGNED BY
DRAWN BY
CHECKED BY
IN CHARGE
DATE

RECORD PEPD SUBMITTAL

APRIL 11, 2019

NOT FOR CONSTRUCTION

HNTB
1111 Broadway
9th Floor
Oakland, CA 94607

CALIFORNIA High-Speed Rail Authority

CALIFORNIA HIGH-SPEED TRAIN PROJECT
SAN JOSE TO MERCED

SAN JOSE DIRIDON STATION APPROACH
VIADUCT TO I-880
SAN JOSE DIRIDON STATION
GENERAL SITE PLAN

CONTRACT NO. HSR15-34
DRAWING NO. AR-C0101
SCALE AS SHOWN
SHEET NO.

SAN FRANCISCO TO SAN JOSE EIR/S: VOLUME III
ALTERNATIVE B
BOOK B5
SHEET 89 OF 142

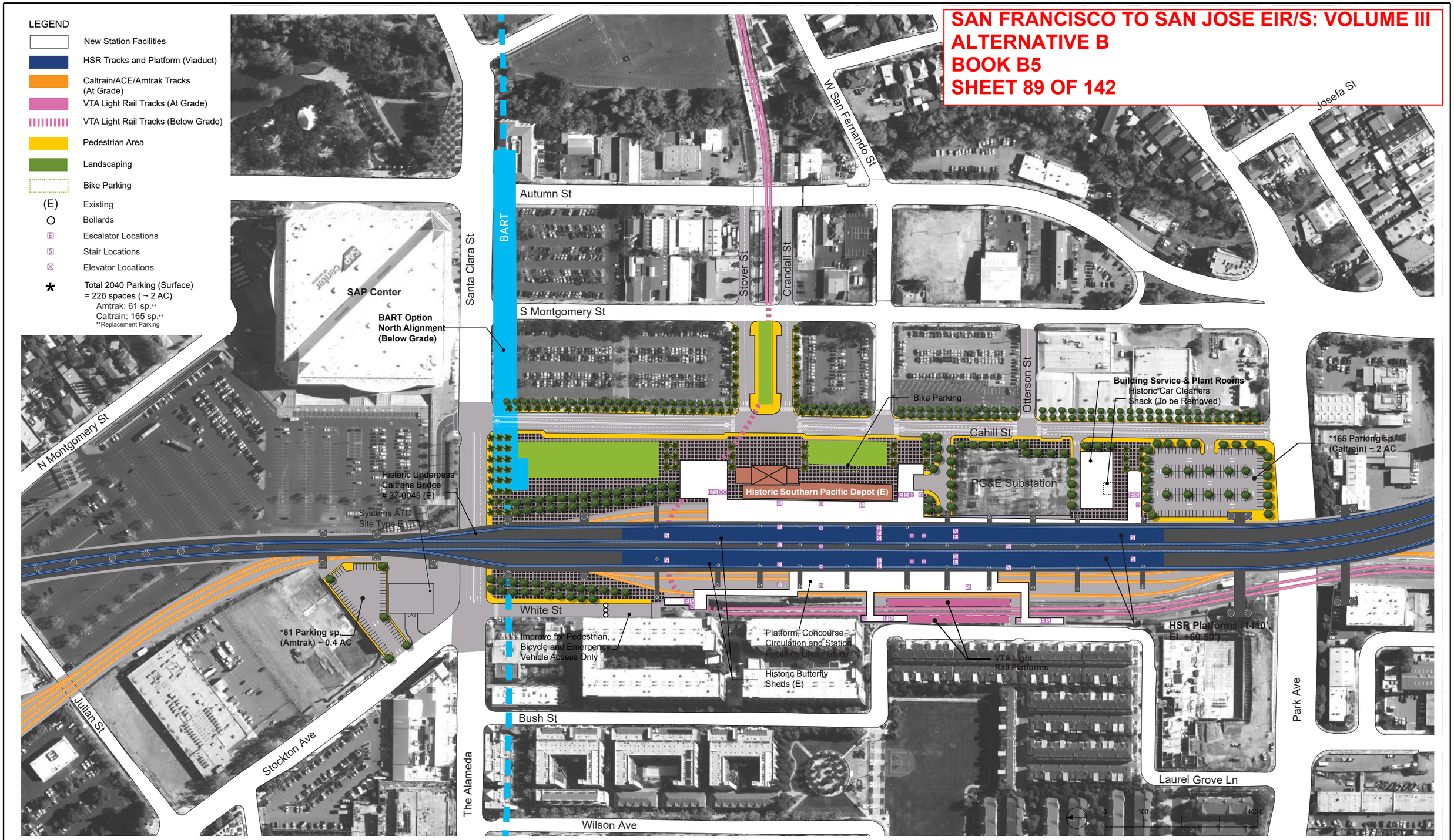

REV	DATE	BY	CHK	APP	DESCRIPTION

DESIGNED BY
DRAWN BY
CHECKED BY
IN CHARGE
DATE

RECORD PEPD SUBMITTAL

NOT FOR CONSTRUCTION

HNTB
1111 Broadway
9th Floor
Oakland, CA 94607

CALIFORNIA High-Speed Rail Authority

CALIFORNIA HIGH-SPEED TRAIN PROJECT
SAN JOSE TO MERCED
SAN JOSE DIRIDON STATION APPROACH
VIADUCT TO I-880
SAN JOSE DIRIDON STATION
DETAILED SITE PLAN

CONTRACT NO. HSR15-34
DRAWING NO. AR-C0102
SCALE AS SHOWN
SHEET NO.

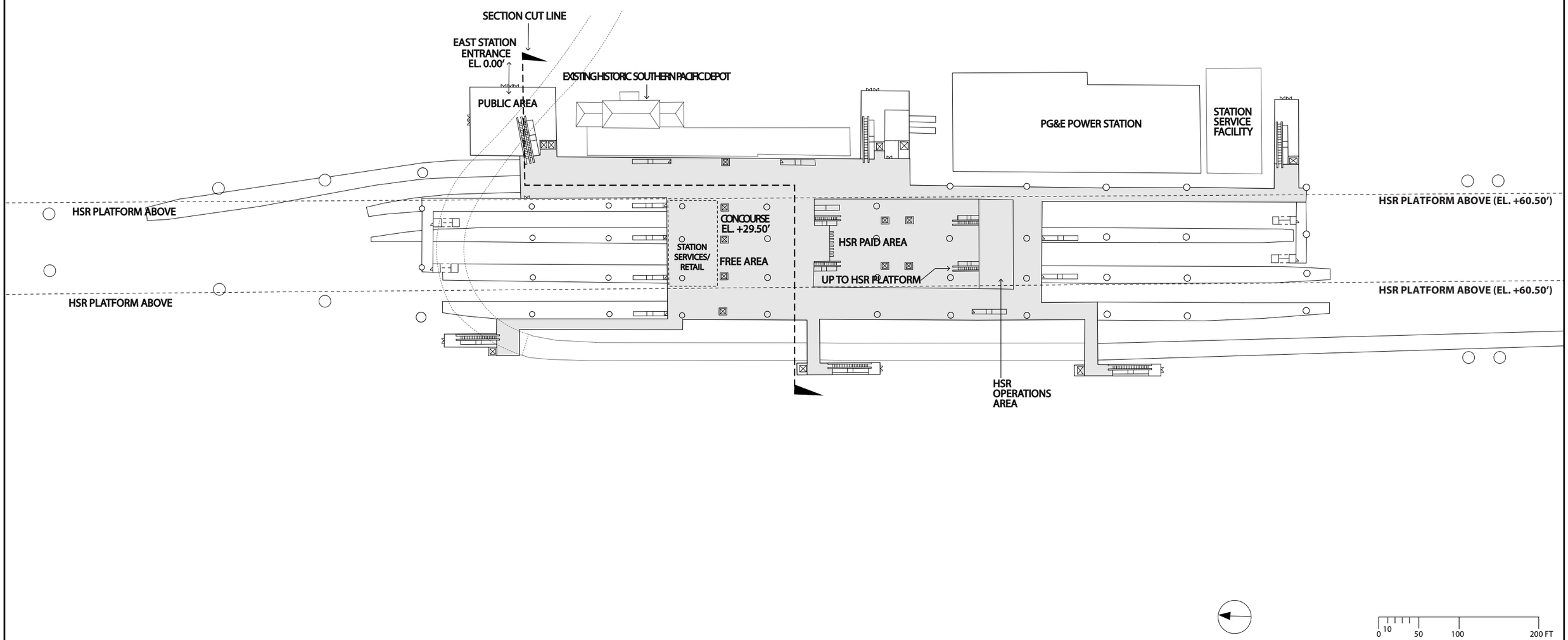

REV	D-TE	BY	CHK	-PP	DESCRIPTION

DESIGNED BY
DRAWN BY
CHECKED BY
IN CH-RGE
D-TE

RECORD PEFD SUBMITTAL
APRIL 11, 2019
NOT FOR CONSTRUCTION

HNTB
1111 Broadway
9th Floor
Oakland, CA 94607

CALIFORNIA High-Speed Rail Authority

CALIFORNIA HIGH-SPEED TRAIN PROJECT
SAN JOSE TO MERCED
SAN JOSE DIRIDON STATION APPROACH
VIADUCT TO I-880
SAN JOSE DIRIDON STATION
CONCOURSE PLAN

CONTRACT NO. HSR15-34
DR-WING NO. -R-F0101
SC-LE -S SHOWN
SHEET NO.

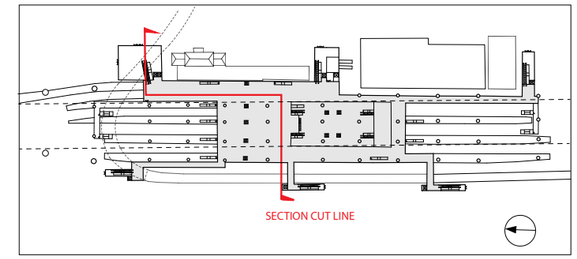

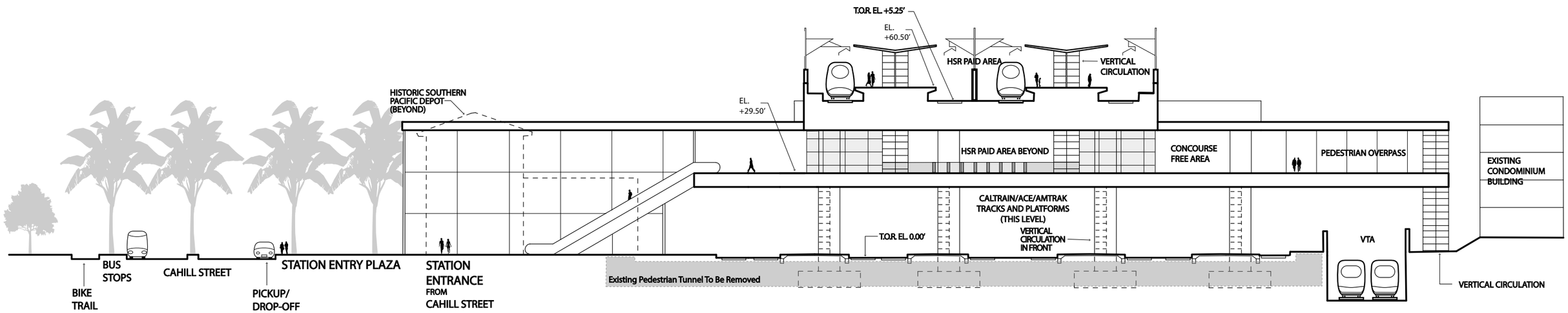

SAN FRANCISCO TO SAN JOSE EIR/S: VOLUME III
ALTERNATIVE B
BOOK B5
SHEET 91 OF 142

0 5 10 50 FT

REV	D-TE	BY	CHK	-PP	DESCRIPTION

DESIGNED BY
DRAWN BY
CHECKED BY
IN CH-RGE
D-TE

RECORD PEFD SUBMITTAL
APRIL 11, 2019
NOT FOR CONSTRUCTION

HNTB
1111 Broadway
9th Floor
Oakland, CA 94607

CALIFORNIA High-Speed Rail Authority

CALIFORNIA HIGH-SPEED TRAIN PROJECT
SAN JOSE TO MERCED
SAN JOSE DIRIDON STATION APPROACH
VIADUCT TO I-880
SAN JOSE DIRIDON STATION
SECTION

CONTRACT NO. HSR15-34
DR-WING NO. -R-Y0101
SC-LE -S SHOWN
SHEET NO.

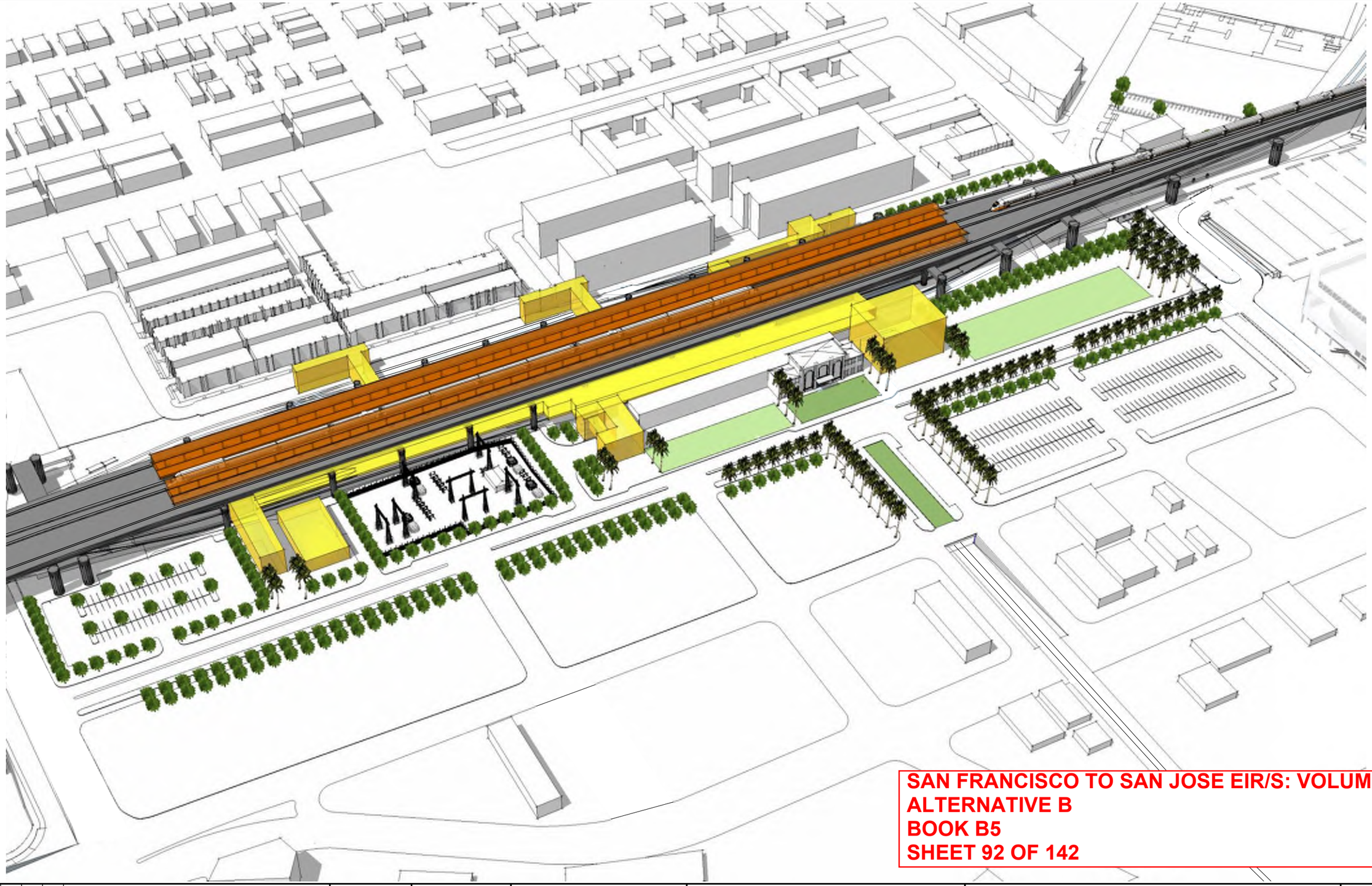

SAN FRANCISCO TO SAN JOSE EIR/S: VOLUME III
ALTERNATIVE B
BOOK B5
SHEET 92 OF 142

REV	D-TE	BY	CHK	-PP	DESCRIPTION

DESIGNED BY
DRAWN BY
CHECKED BY
IN CH-RGE
D-TE

RECORD FEFD SUBMITTAL

APRIL 11, 2019

NOT FOR CONSTRUCTION

HNTB
1111 Broadway
9th Floor
Oakland, CA 94607

CALIFORNIA High-Speed Rail Authority

CALIFORNIA HIGH-SPEED TRAIN PROJECT
SAN JOSE TO MERCED
SAN JOSE DIRIDON STATION APPROACH
VIADUCT TO I-880
SAN JOSE DIRIDON STATION
MASSING DIAGRAM 1

CONTRACT NO. HSR15-34
DR-WING NO. -R-Y0102
SC-LE -S SHOWN
SHEET NO.

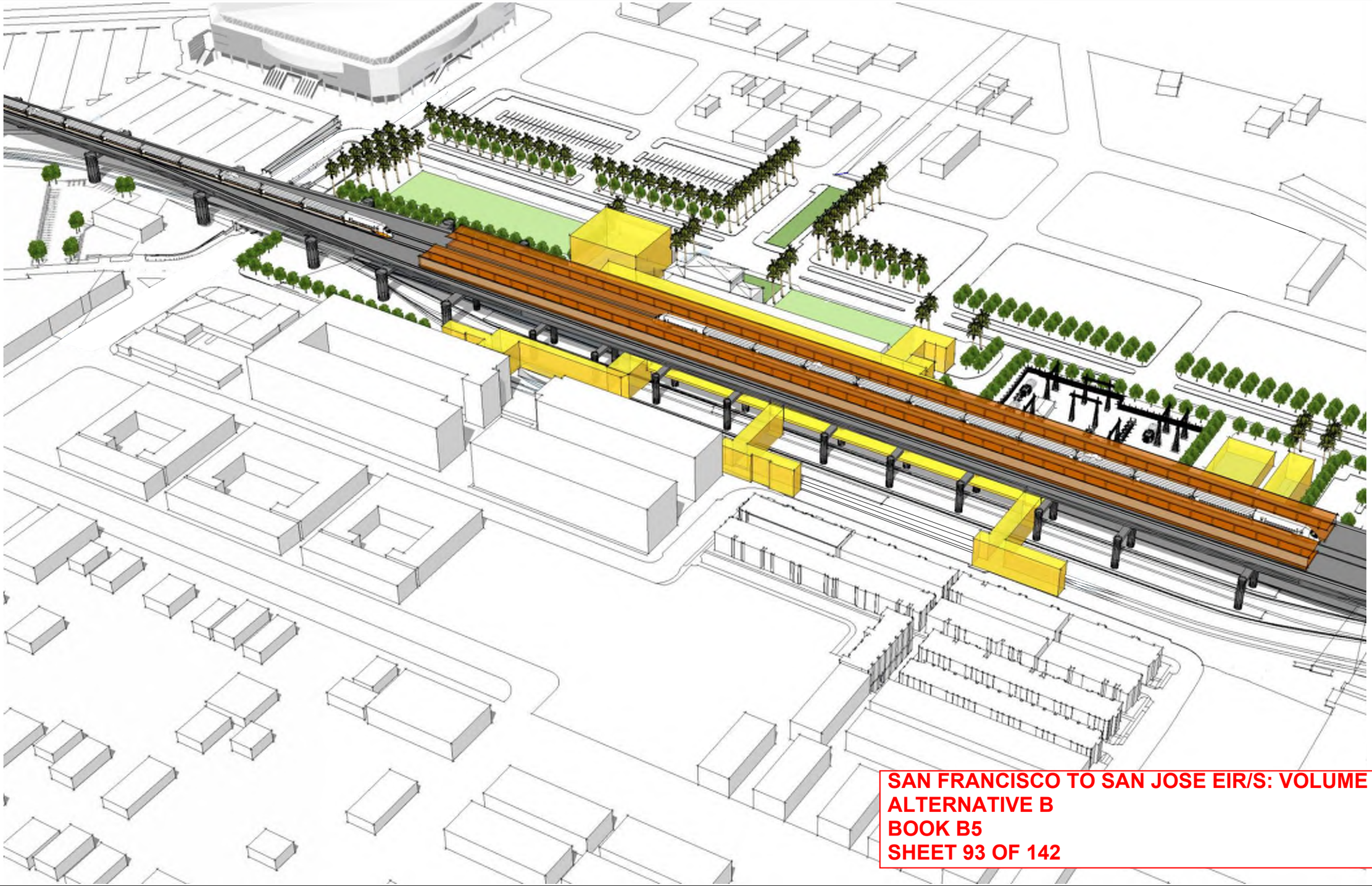

SAN FRANCISCO TO SAN JOSE EIR/S: VOLUME III
ALTERNATIVE B
BOOK B5
SHEET 93 OF 142

REV	D-TE	BY	CHK	-PP	DESCRIPTION

DESIGNED BY
DRAWN BY
CHECKED BY
IN CH-RGE
D-TE

RECORD FEFD SUBMITTAL

APRIL 11, 2019

NOT FOR CONSTRUCTION

HNTB
1111 Broadway
9th Floor
Oakland, CA 94607

CALIFORNIA High-Speed Rail Authority

CALIFORNIA HIGH-SPEED TRAIN PROJECT
SAN JOSE TO MERCED
SAN JOSE DIRIDON STATION APPROACH
VIADUCT TO I-880
SAN JOSE DIRIDON STATION
MASSING DIAGRAM 2

CONTRACT NO. HSR15-34
DR-WING NO. -R-Y0103
SC-LE -S SHOWN
SHEET NO.

Diridon Station Programming & Area Requirements Table				
Category	Description	Formula	Requirement Area / Unit	Comments
Daily Peak Ridership Boardings 2040	Long Distance	15,430	15,430	Planning Memorandum Station Boardings, Access, Egress and Parking INST-PLAN-05
P360B	Highest Daily Boardings x Conversion Factor for Boardings = 6 Hour Boardings	Highest Daily Boardings x 0.67=P360B 6,000 x 0.67	10,338	California HSTP Design Criteria, Chapter 14-Stations, Oct 2015, Working Draft, Rev. 2 Table 14-1 Passenger Ridership Assumptions Table 14-3 Concourse Circulation and Waiting Areas
P360A	Peak 6 Hour Boardings x Conversion Factor for Alightings = 6 Hour Alightings	P360B x 0.75=P360A 10,385 x 0.75	7,754	
P60B	Peak 6 Hour Boardings x Peak Hour Conversion Factor for Boardings = Peak Hour Boardings	P360B x 0.17=P60B 10,385 X 0.17	1,757	
P60A	Peak Hour Boardings x Peak Hour Conversion Factor for Alightings = Peak Hour Alightings	P60B x 0.75=P60A 1,765 x 0.75	1,318	
P30B	Peak Hour Boardings /2 x Surge Factor = Peak 30 Minute Boardings	(P60B /2) x 1.2=P30B (1,765/2) x 1.2	1,054	
P30A	Peak 30 Minute Boardings x Conversion Factor = Peak 30 Minute Alightings	P30B x 0.075=P30A 1,059 x 0.75	791	
P15B	Peak Hour Boardings / 4 x Surge Factor = Peak 15 Minute Boardings	(P60B /4) x 1.3= P15B (1,765 /4) x 1.3	571	
P15A	Peak 15 Minute Boardings x Conversion Factor=Peak 15 Minute Alightings	P15B x 0.75=P15A 574 x 0.75	428	
P5B	Peak Hour Boardings /12 x Surge Factor = Peak 5 Minute Boardings	(P60B /12) x 1.4= P5B (1,765 /12) x 1.4	205	
P5A	Peak 5 Minute Boardings x Conversion Factor = Peak 5 Minute Alightings	P5B x 0.75=P5A 206 x 0.75	154	
P1B	Peak Hour Boardings /60 x Surge Factor=Peak 1 Minute Boardings	(P60B /60) x 1.5=P1B (1,765/60) x 1.5	44	
P1A	Peak 1 Minute Boardings x Conversion Factor for Alightings=Peak 1 Minute Alightings	P1Bx0.75 17x0.75	33	
Cf	Unobstructed Net Concourse Free Public Area Circulation Width	(P15B+P15A)/(15x10 people/ft/min) or 16 ft min. (222+167)/(15x10 people/ft/min)	16	
Wf	Net Waiting Area in Concourse Free Public Area	((P15Bx1.1) + (P15Ax0.1))x 14 SF ((222x1.1) +(167x0.1)) x 14	9,396	
Public Restrooms	Women + Men + Unisex Accessible Restroom for Each Group	(P15B+P15A)/ 2 (222+167) /2	499.8	14.3.4 Public Restrooms
Passenger Amenity Space Allocation	Station Design Target Year Daily Boardings	9,000	9,000	California HSTP Design Criteria, Chapter 14 - Stations, March Rev. 2 14.3.5.5 Station Public Amenity (Commercial) Spaces, Table 14-7
Ticket Windows	Station Quantity	P60B/600 1765/600	3	
Ticket Vending Machines		P60B/280 1765/280	6	14.3.5.6
Value Added Machines	2 Per Each Fare Paid Area		3	14.3.5.6
Fare Gates		P15A /50 ppm 430/50 One additional gate to be provided if under 10	9	14.3.5.6 D
Emergency Gates			2	14.3.3.6
Sr	Seating at Concourse Fare Free Waiting Area	((P15B x 1.1) + (P15A x 0.1)) x 0.25	1,581	Table 14-22: Station Seating

SAN FRANCISCO TO SAN JOSE EIR/S: VOLUME III
ALTERNATIVE B
BOOK B5
SHEET 94 OF 142

REV	D-TE	BY	CHK	-PP	DESCRIPTION

DESIGNED BY
DRAWN BY
CHECKED BY
IN CH-RGE
D-TE

RECORD PEPD SUBMITTAL
APRIL 11, 2019
NOT FOR CONSTRUCTION

HNTB
1111 Broadway
9th Floor
Oakland, CA 94607

CALIFORNIA High-Speed Rail Authority

CALIFORNIA HIGH-SPEED TRAIN PROJECT
SAN JOSE TO MERCED
SAN JOSE DIRIDON STATION APPROACH
VIADUCT TO I-880
SAN JOSE DIRIDON STATION
FACILITY SIZING TABLE

CONTRACT NO. HSR15-34
DR-WING NO. -R-Y0104
SC-LE -S SHOWN
SHEET NO.

Diridon Station Facility Sizing Table

Projected Daily Ridership (2040) 15,430, based on CHSR Planning Memorandum Station Boardings, Access, Egress and Parking

STATION TYPE: Intermediate, Full-Service, Small: based on Chapter 14 Stations Design Criteria, Table 14-3

	Function Name	Area (SF)	EF	Required Area (SF)	Formula	Chapter 14: Stations	Comments
Concourse Public Free Areas	Station Concourse (Free Area - Main Hall)	35,984	1.2	29,987	P15 x 30 SF /person 389 x 30	14.3.5.3	P15 = P15 B + P15 A = 389 Using Memorandum dated May 10, 2016, Attachment E Facility Sizing Table Example
	Entrances					14.3.5.2	# TBD, 15 ft width at least one entrance
	Mezzanine						Included with the concourse Area
	Passenger Waiting Area	11,275	1.2	9,396	((P15B x 1.1)+(P15Ax0.1)) x 14 SF	14.3.5.3.B.C Table 14-3	California HSTP Design Criteria, Chapter 14-Stations, March 2016, Rev. 2, Table 14-1 Passenger Ridership Assumptions, Table 14-3 Concourse Circulation and Waiting Areas
	Ticket Vending Machines (TVM)	188	1.2	6	P60B/280, 1765/280	Table 14-5	Includes queuing space
	Baggage Storage (Concessionaire)	TBD					TBD
	Retail (Concessionaire)	10,800	1.2	9,000		Table 14-7	More than 15,000 daily boardings
	Restaurant (Concessionaire)	0				Table 14-7	Included in the 9,000 SF
	Food Service (Concessionaire)	0				Table 14-7	Included in the 9,000 SF
	Business Lounge	720	1.2	600		14.3.5.7.C	Without restrooms
	Public Restrooms	2,448	1.2	2040	CBC 2016, CPC 2016 (P15B + P15A)/2	14.3.5.4	A-3 assembly occupancy, 502 male, 502 female, 2 unisex Female: 7 water closets, 5 lavatories Male: 3 water closets, 4 urinal, 5 lavatories 2 drinking fountains
	Janitor Closets	288	1.2	240	60 x 4	14.3.7.1.D	Located in concourse free area, platform, and each restroom.
Standard Areas	Ticket Window Counters	879	2	150	Window Counter 5F min. 75 SF/window (2 windows) P60B/600, 1,765/600	14.3.5.6.B 14.3.5.7A	
	Station Patron Information Booth	100	1	100	Standard Unit (Kiosk)	14.3.5.7.B	
	Red "Cap" Booth						TBD
Security	Police Office	1,000	2	500		14.3.6.2.A	
	Police Restrooms + Lockers			TBD	CBC 2016, CPC 2016		
	Janitor Closets	120	2	60		14.3.7.1.D	
	Security Guard Office	288	2	144		14.3.6.2.B	

SAN FRANCISCO TO SAN JOSE EIR/S: VOLUME III
ALTERNATIVE B
BOOK B5
SHEET 95 OF 142

REV	D-TE	BY	CHK	-PP	DESCRIPTION

DESIGNED BY
DRAWN BY
CHECKED BY
IN CH-RGE
D-TE

RECORD FEFD SUBMITTAL
APRIL 11, 2019
NOT FOR CONSTRUCTION

HNTB
1111 Broadway
9th Floor
Oakland, CA 94607

CALIFORNIA High-Speed Rail Authority

CALIFORNIA HIGH-SPEED TRAIN PROJECT
SAN JOSE TO MERCED
SAN JOSE DIRIDON STATION APPROACH
VIADUCT TO I-880
SAN JOSE DIRIDON STATION
FACILITY SIZING TABLE

CONTRACT NO. HSR15-34
DR-WING NO. -R-Y0105
SC-LE -S SHOWN
SHEET NO.

Diridon Station Facility Sizing Table

Projected Daily Ridership (2040) 15,430, based on CHSR Planning Memorandum Station Boardings, Access, Egress and Parking

STATION TYPE: Intermediate, Full-Service, Small: based on Chapter 14 Stations Design Criteria, Table 14-3

	Function Name	Area (SF)	EF	Required Area (SF)	Formula	Chapter 14: Stations	Comments
Non-Public Station Staff Only	Ticket Administration, Handling & Storage	520	2	260		14.3.5.6.B 14.3.5.7 14.3.6.2.C-D	Ticket Administration Office 75 SF /window
	Lost & Found & First Aid Room	400	2	200	100 SF x (2)	14.3.6.1.E-F	
	Station Control Room (SCR)	2,200	2	1,100		14.3.6.2.E	
	Main Station Computer Room	1,000	2	500		14.3.6.2.F	
	Temporary Incident Command Post (CP)	600	2	300		14.3.6.2.G	
	Station Operation Room (SOR)	2,200	2	1,100		14.3.6.2.H	
	SOR Dedicated Computer Room, SOR Workroom	1,000	2	500		14.3.6.2.F-H	
	Main OCC Computer Room	1,000	2	500		14.6.3.2.F	
	Staff Lockers, Showers, Restrooms	TBD	2		CBC 2016	14.3.6.1.I	Will need number of staff projection to determine SF required.
	Janitor Closets	120	2	60		14.3.7.1.C	
	Staff Breakroom & Meeting Rooms	800	2	400	200 SF x (2)	14.3.6.1.G-H	200 SF min or as req to provide 25 SF /staff
	Station Manager Office	288	2	144		14.3.6.1.A	
	Facility Manager's Office	288	2	144		14.3.6.1.C	
	Administration Office Space	600	2	300		14.3.6.1.B	
	Facilities Maintenance Office	660	2	330		14.3.6.1.C	
	Station General Storage Rooms	400	2	200		14.3.7.1.E	Add 60 SF for miscellaneous storage if required.
	Platform Area Op. Mgt. Booth	100	1	100	Standard Unit	14.3.6.2.I	One OMB to be provided on each platform.
	Train Control /Communications Room	3,830	2	1,915		14.3.7.2	Table 14-8, for the train control and communications equipment.
	Entrance Facility Room	480	2	240		14.3.7.2	Table 14-8, for entry of service cabling into the building. May be co-located with the TCC room.
	3rd Party Telecom Room	240	2	120		14.3.7.2	Table 14-8, for local telephone company.
	Communications Closets	260	2	130	130 SF each	14.3.7.2	Table 14-8, number TBD. Locate close to center of each 10,000 SF of station floor area.
	Renewable Energy/Stormwater			TBD			
Building Survices & Plant Rooms	Mech., Elec. & Plumbing Rooms			TBD	Gross Factor	14.3.7.2	
	Battery Room	800	2	400	200 SF x (2)	14.3.7.4.B	Two rooms required, including one room at each end of station for low voltage (LV) batteries.
	UPS Room	3,600	2	1,800	900 SF x (2)	14.3.7.4.C	Two rooms required, one at each end of station for LV distribution, transforming, EP
	Fire Detection & Protection Rooms			TBD	Gross Factor	14.3.7.6	
Maint. Support Areas	Main Station Recycling/Refuse	300	2	150	150 SF min.	14.3.7.1.A	
	Secondary Station Recycling	120	2	60		14.3.7.1.C	
	Landscape Maintenance Room	200	2	100		14.3.7.1.F	
	Loading Dock			TBD		14.3.7.1.H	
	TOTAL AREA - WEST ENTRANCE & CONCOURSE:	**86,096**	**SF**				

SAN FRANCISCO TO SAN JOSE EIR/S: VOLUME III
ALTERNATIVE B
BOOK B5
SHEET 96 OF 142

REV	D-TE	BY	CHK	-PP	DESCRIPTION

DESIGNED BY
DRAWN BY
CHECKED BY
IN CH-RGE
D-TE

RECORD FEFD SUBMITTAL
APRIL 11, 2019
NOT FOR CONSTRUCTION

HNTB
1111 Broadway
9th Floor
Oakland, CA 94607

CALIFORNIA High-Speed Rail Authority

CALIFORNIA HIGH-SPEED TRAIN PROJECT
SAN JOSE TO MERCED
SAN JOSE DIRIDON STATION APPROACH
VIADUCT TO I-880
SAN JOSE DIRIDON STATION
FACILITY SIZING TABLE

CONTRACT NO. HSR15-34
DR-WING NO. -R-Y0106
SC-LE -S SHOWN
SHEET NO.

Diridon Station Facility Sizing Table

Projected Daily Ridership (2040) 15,430, based on CHSR Planning Memorandum Station Boardings, Access, Egress and Parking

STATION TYPE: Intermediate, Full-Service, Small: based on Chapter 14 Stations Design Criteria, Table 14-3

	Function Name	Area (SF)	EF	Required Area (SF)	Formula	Chapter 14: Stations	Comments
Concourse Public Free Areas West Station	Concourse (Free Area)	8,996.09	1.2	7,497	P15 x 30 SF /person, 251x30	14.3.5.3	P15 = P15 B + P15 A. Using Memorandum dated May 10, 2016, Attachment E Facility Sizing Table Example 20% - 25% of the P15 of the Main Station North Entrance, about 97 passengers.
	Entrances					14.3.5.2	# TBD, 15 ft width at least one entrance
	Passenger Waiting Area	2,818.77	1.2	2349	[((P15B x1.1) + (P15Ax0.1))x25%] x 14 SF	14.3.5.3.B.C Table 14-3	California HSTP Design Criteria, Chapter 14-Stations, March 2016, Rev. 2 and October 2015, Working Draft, Rev. 2 Table 14-1 Passenger Ridership Assumptions, Table 14-3 Concourse Circulation and Waiting Areas 20% - 25% of 15B (Main Station) = 56; 20% - 25% of 15A (Main Station)
	Ticket Vending Machines (TVM)	82.00		2	P60B/280, 683x25%/280	Table 14-5	Includes queuing space; 20% -25% of P60 B (Main Station) 170
	Public Restrooms	1,224.00	1.2	1020	CBC 2016, CPC 2016 (P15B + P15A)/2	14.3.5.4	A-3 assembly occupancy, 250 male, 250 female, 2 unisex Female: 4 water closets, 2 lavatories Male: 2 water closets, 2 urinal, 2 lavatories 2 drinking fountains
	Janitor Closet	72	1.2	60		14.3.7.1.D	
	TOTAL AREA - EAST ENTRANCE:	**13,193**	**SF**				
	Platform Area (800'x30')x2	48,000					
	Bus Bays						Included in Cahill transit street improvement
	Parking Area						No parking for HSR provided
	Pickup and Drop-off						Included in Cahill transit street improvement

SAN FRANCISCO TO SAN JOSE EIR/S: VOLUME III
ALTERNATIVE B
BOOK B5
SHEET 97 OF 142

REV	D-TE	BY	CHK	-PP	DESCRIPTION

DESIGNED BY
DRAWN BY
CHECKED BY
IN CH-RGE
D-TE

RECORD PEFD SUBMITTAL
APRIL 11, 2019
NOT FOR CONSTRUCTION

HNTB
1111 Broadway
9th Floor
Oakland, CA 94607

CALIFORNIA High-Speed Rail Authority

CALIFORNIA HIGH-SPEED TRAIN PROJECT
SAN JOSE TO MERCED
SAN JOSE DIRIDON STATION APPROACH
VIADUCT TO I-880
SAN JOSE DIRIDON STATION
FACILITY SIZING TABLE

CONTRACT NO. HSR15-34
DR-WING NO. -R-Y0107
SC-LE -S SHOWN
SHEET NO.

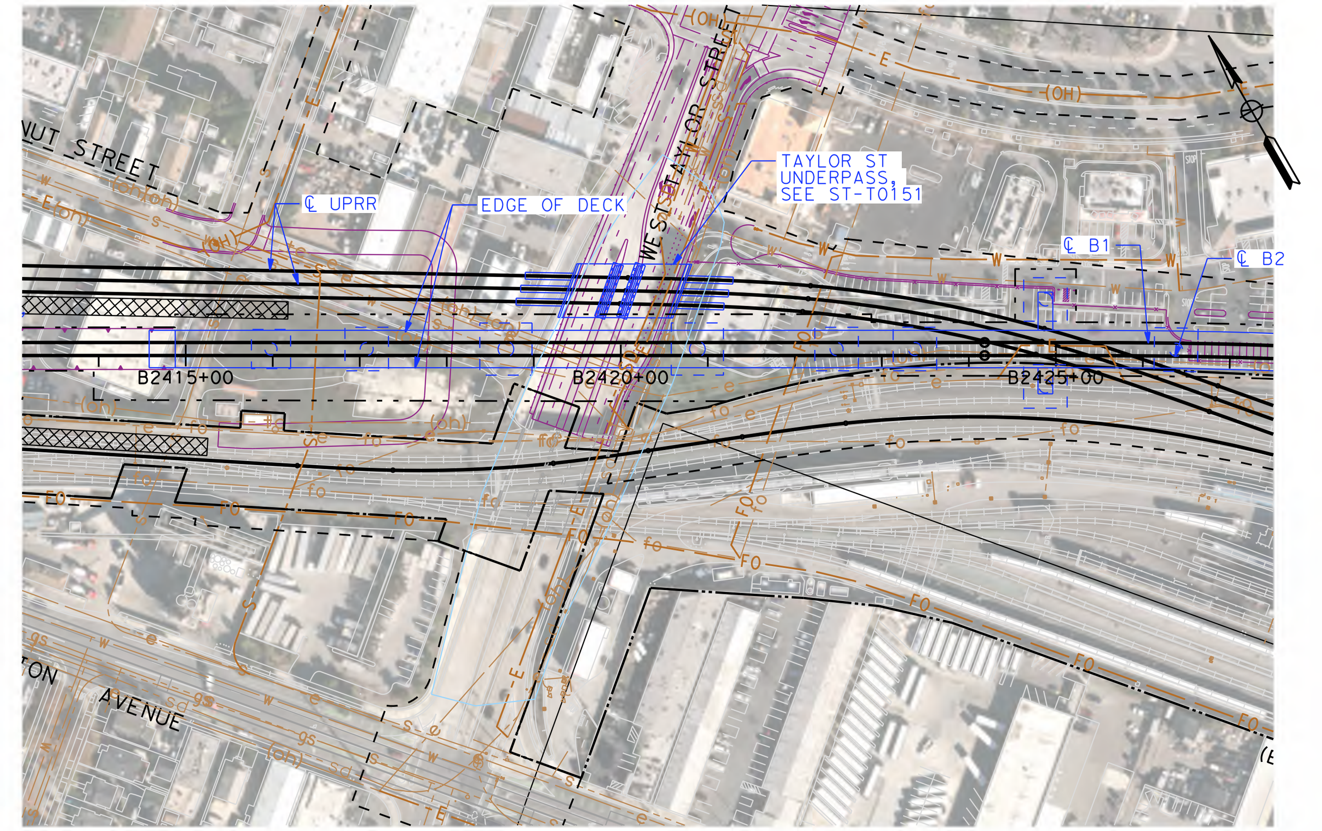

PLAN - W. TAYLOR ST.
SCALE: 1"=200'

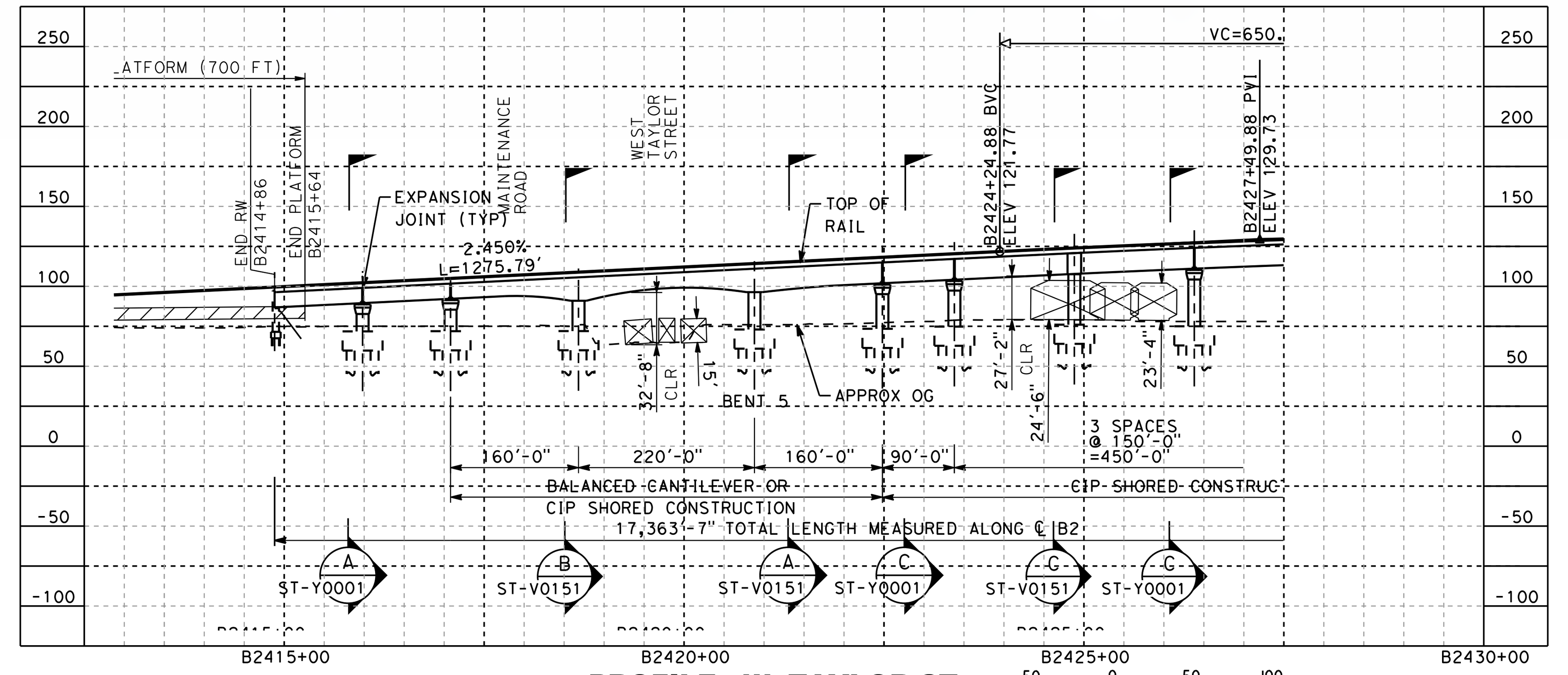

PROFILE - W. TAYLOR ST.
SCALE: 1"=200' HOR, 1"=100' VERT

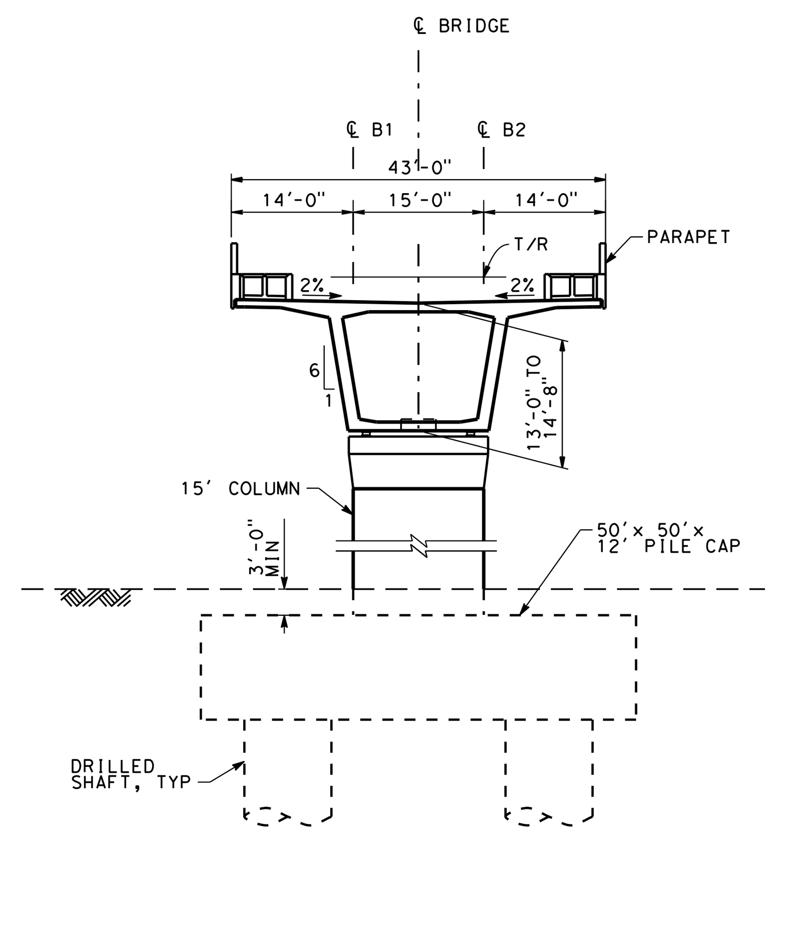

SECTION A
SCALE 1"=20'-0"

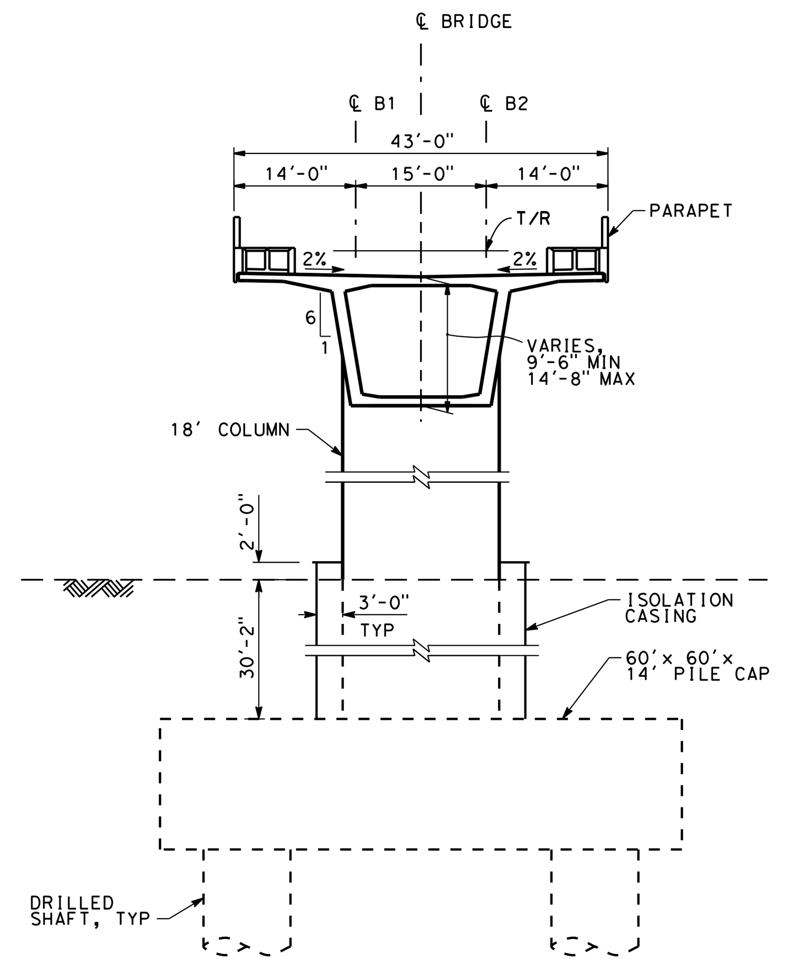

SECTION B
SCALE 1"=20'-0"

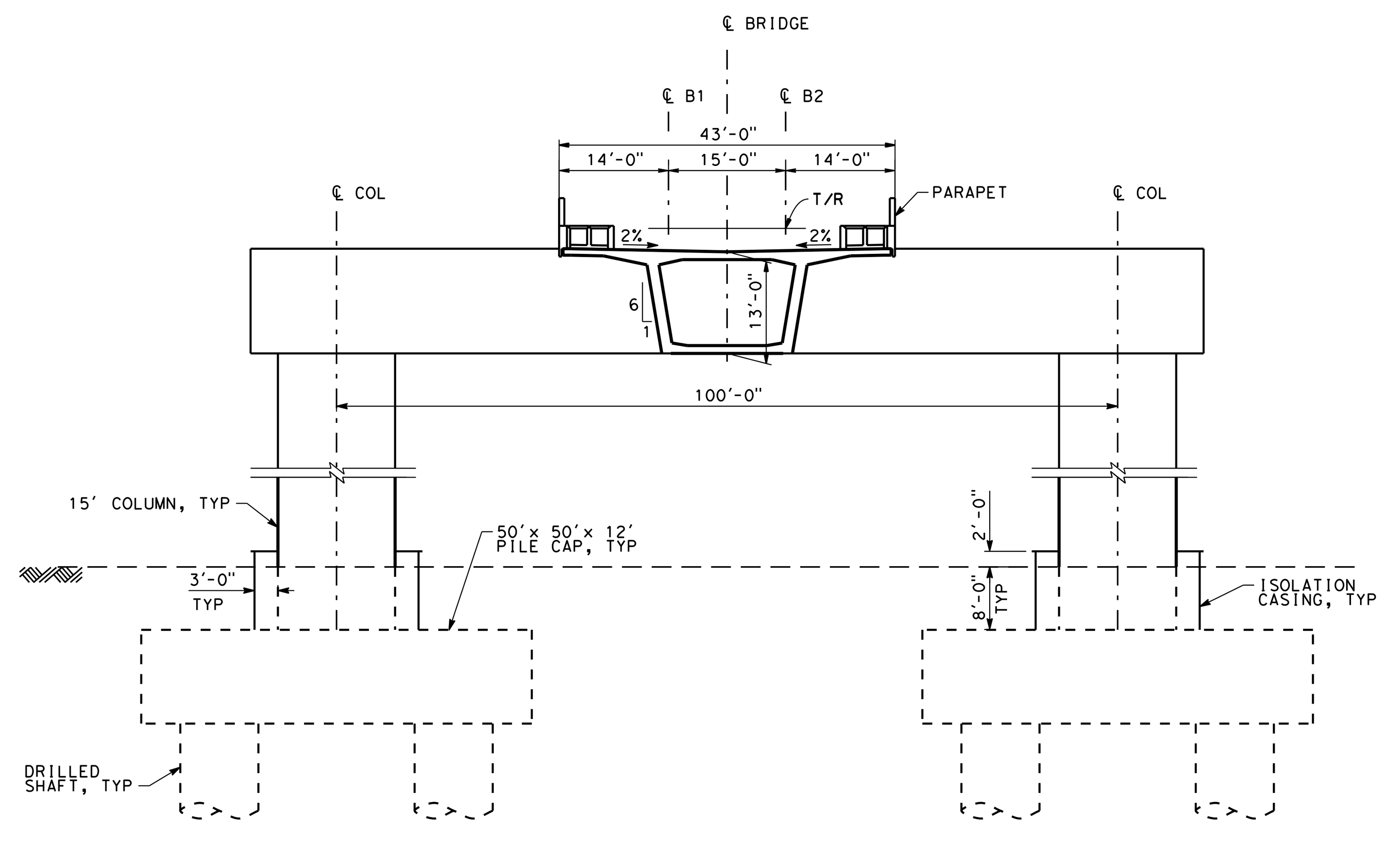

SECTION C
SCALE 1"=20'-0"

NOTE:

1. REFER TO GENERAL NOTES DRAWING NO. GE-B0101 FOR NOTES.

SAN FRANCISCO TO SAN JOSE EIR/S: VOLUME III
ALTERNATIVE B
BOOK B5
SHEET 98 OF 142

RECORD PEPD SUBMITTAL APRIL 11, 2019 NOT FOR CONSTRUCTION	HNTB 1111 Broadway 9th Floor Oakland, CA 94607	CALIFORNIA High-Speed Rail Authority	**CALIFORNIA HIGH-SPEED TRAIN PROJECT** **SAN JOSE TO MERCED** SAN JOSE DIRIDON STATION APPROACH VIADUCT TO I-880 COMPLEX STRUCTURES GENERAL PLAN 1 OF 2	CONTRACT NO. HSR15-34 DRAWING NO. ST-V0151 SCALE AS SHOWN SHEET NO.

rdeleon 4/30/2019 3:45:07 PM CAHSRP.tbl cvd_pdf_bw.pltcfg c:\caddlib\pw\rdeleon\46037_cahsr\dms17856\FJ-RP-ST-V0151.dgn

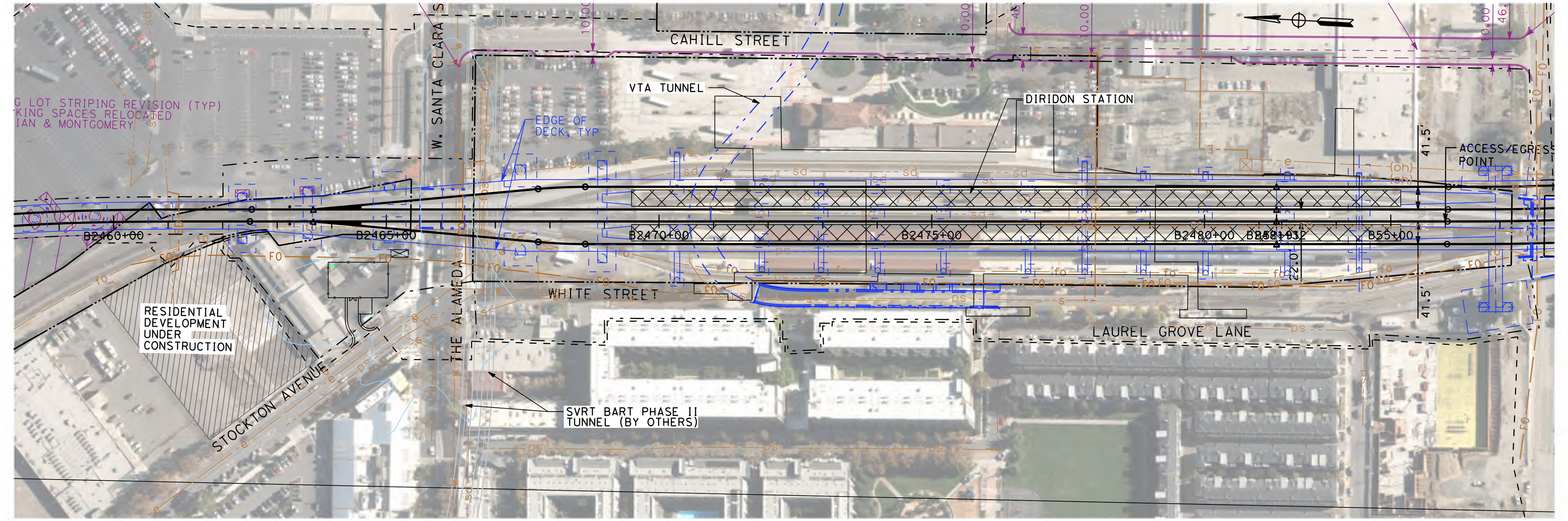

PLAN - W. SANTA CLARA ST AND DIRIDON STATION

SCALE: 1"=200'

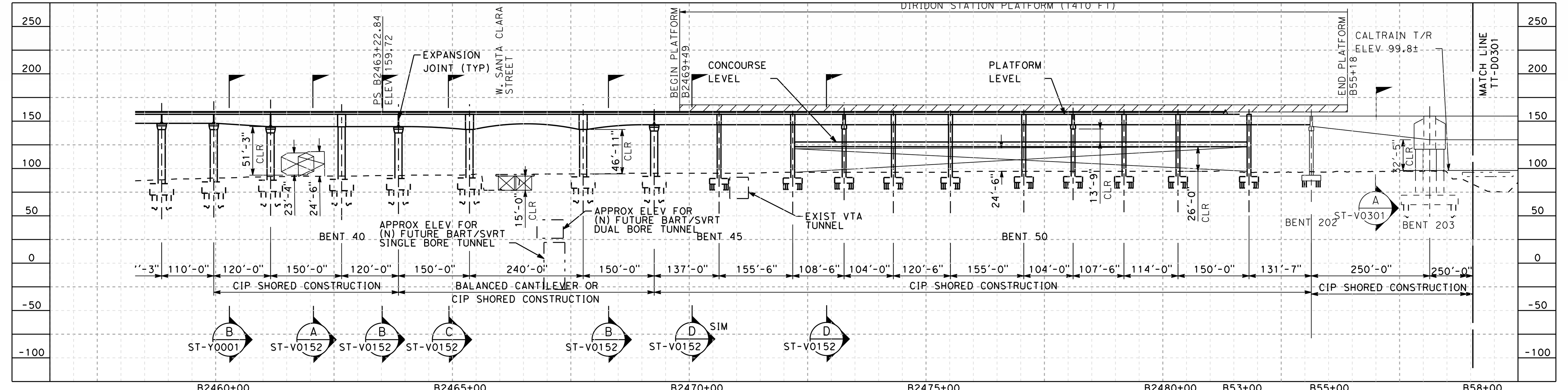

PROFILE - W. SANTA CLARA ST AND DIRIDON STATION

SCALE: 1"=200' HOR, 1"=100' VERT

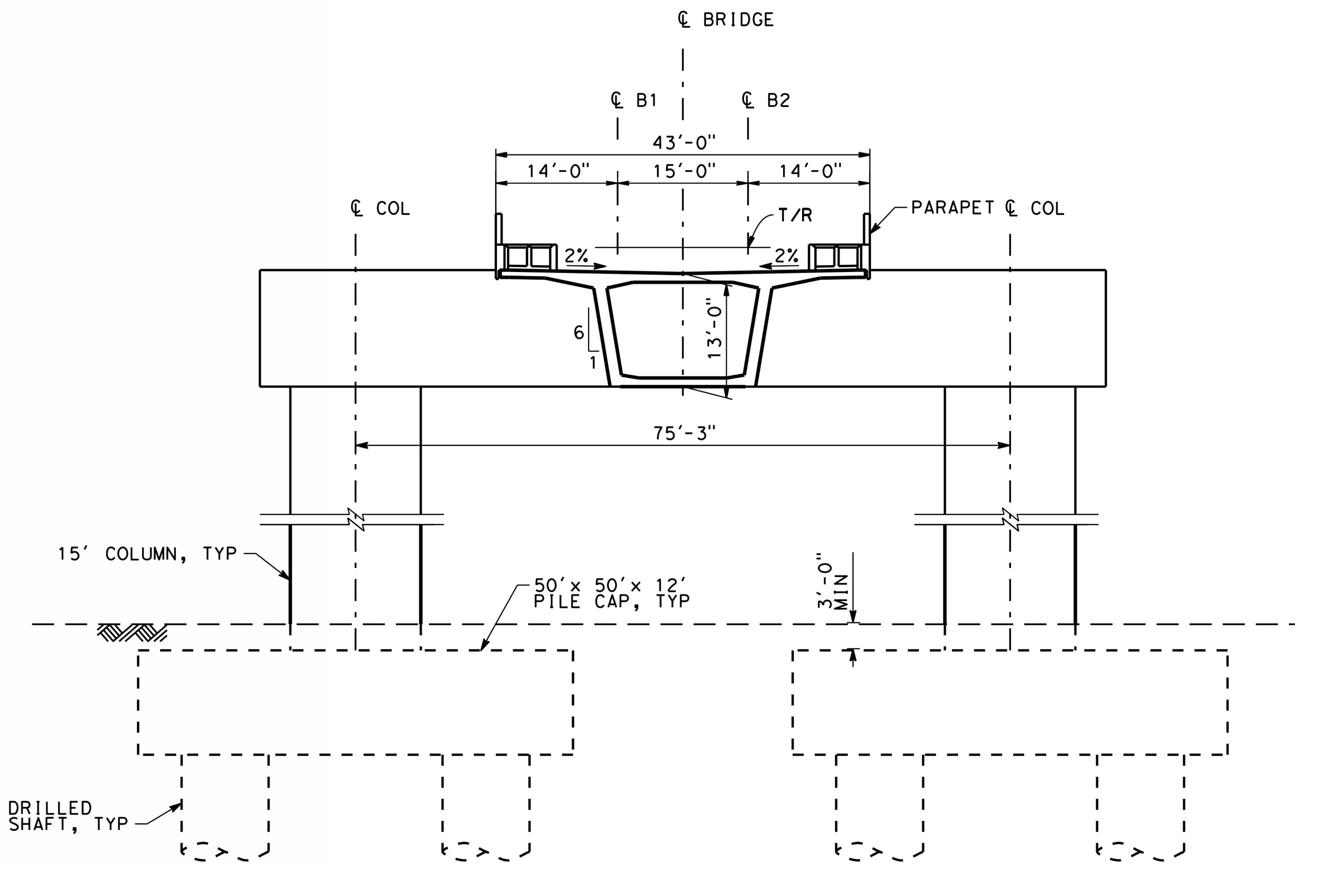

SECTION A

SCALE 1"=20'-0"

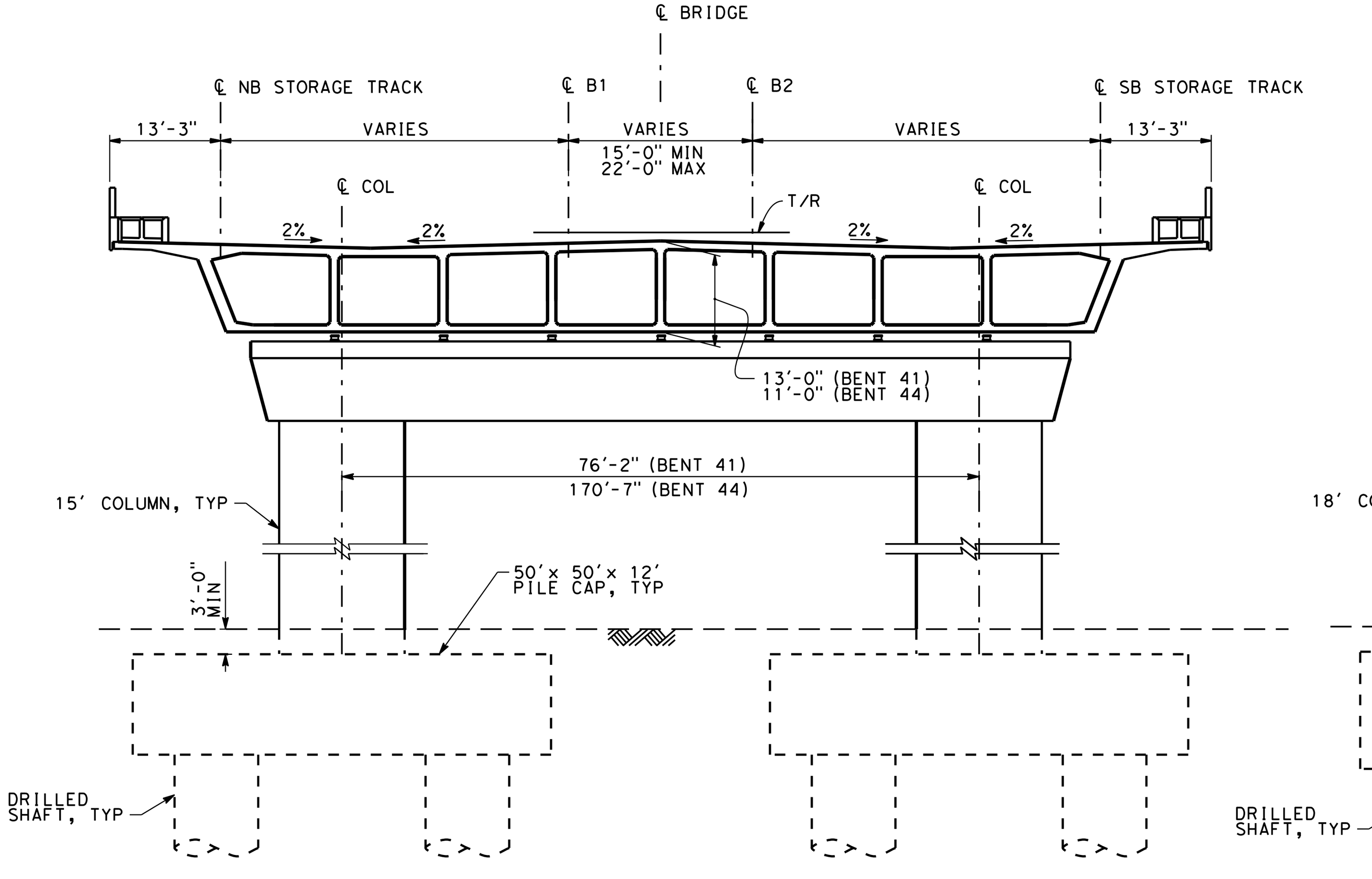

SECTION B

SCALE 1"=20'-0"

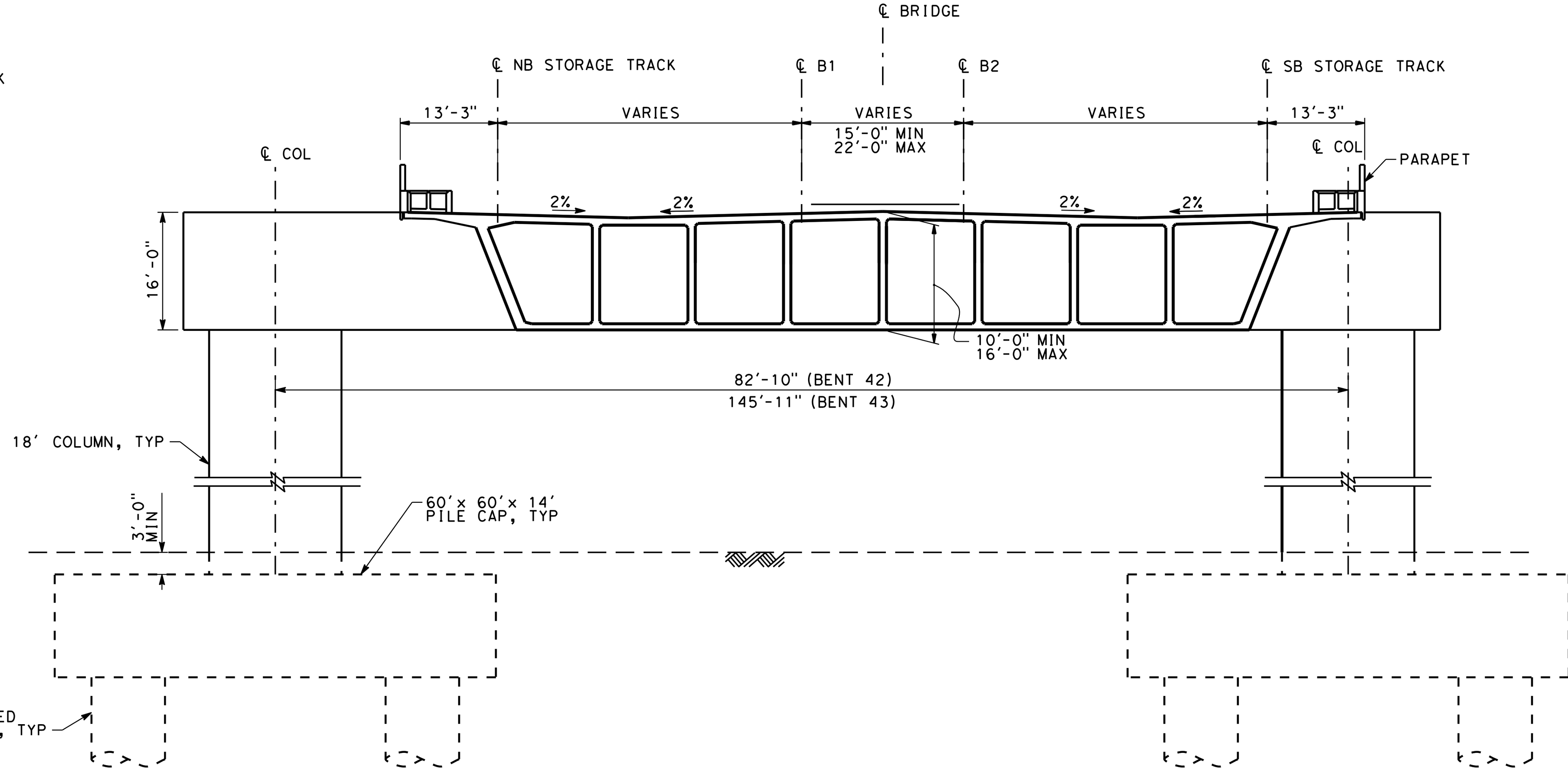

SECTION C

SCALE 1"=20'-0"

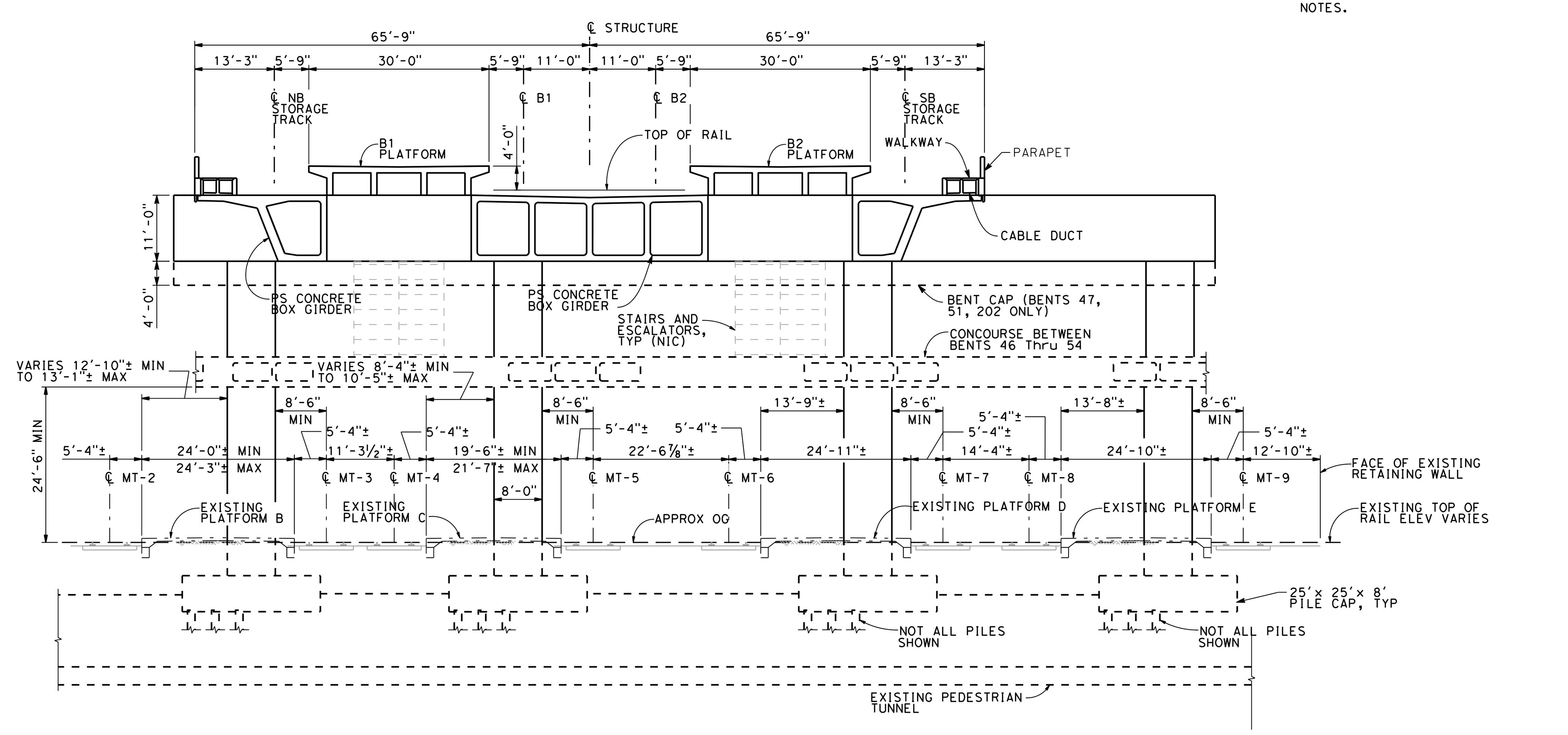

SECTION D

SCALE 1"=20'-0"

NOTE:

1. REFER TO GENERAL NOTES DRAWING NO. GE-B0101 FOR NOTES.

SAN FRANCISCO TO SAN JOSE EIR/S: VOLUME III
ALTERNATIVE B
BOOK B5
SHEET 99 OF 142

RECORD PEPD SUBMITTAL APRIL 11, 2019 NOT FOR CONSTRUCTION	HNTB 1111 Broadway 9th Floor Oakland, CA 94607	CALIFORNIA High-Speed Rail Authority	**CALIFORNIA HIGH-SPEED TRAIN PROJECT** **SAN JOSE TO MERCED** SAN JOSE DIRIDON STATION APPROACH VIADUCT TO I-880 COMPLEX STRUCTURES GENERAL PLAN 2 OF 2	CONTRACT NO. HSR15-34 DRAWING NO. ST-V0152 SCALE AS SHOWN SHEET NO.

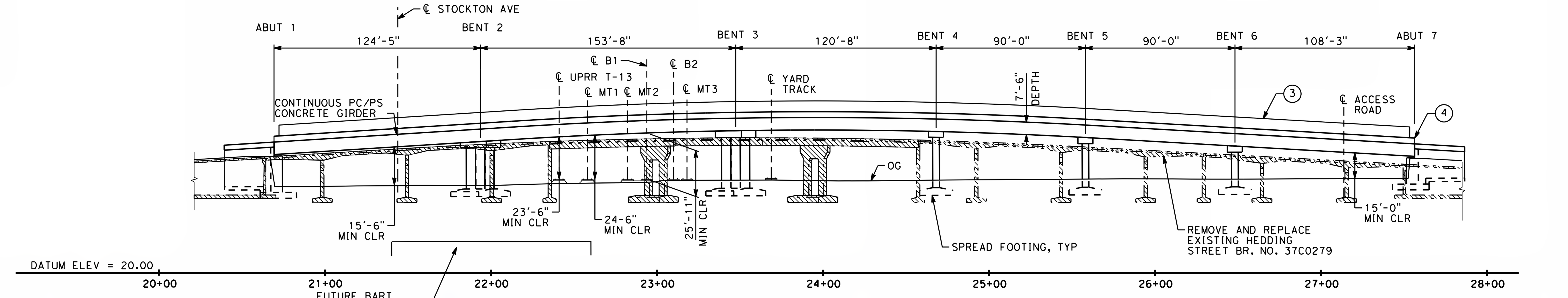

ELEVATION
SCALE: 1" = 60'

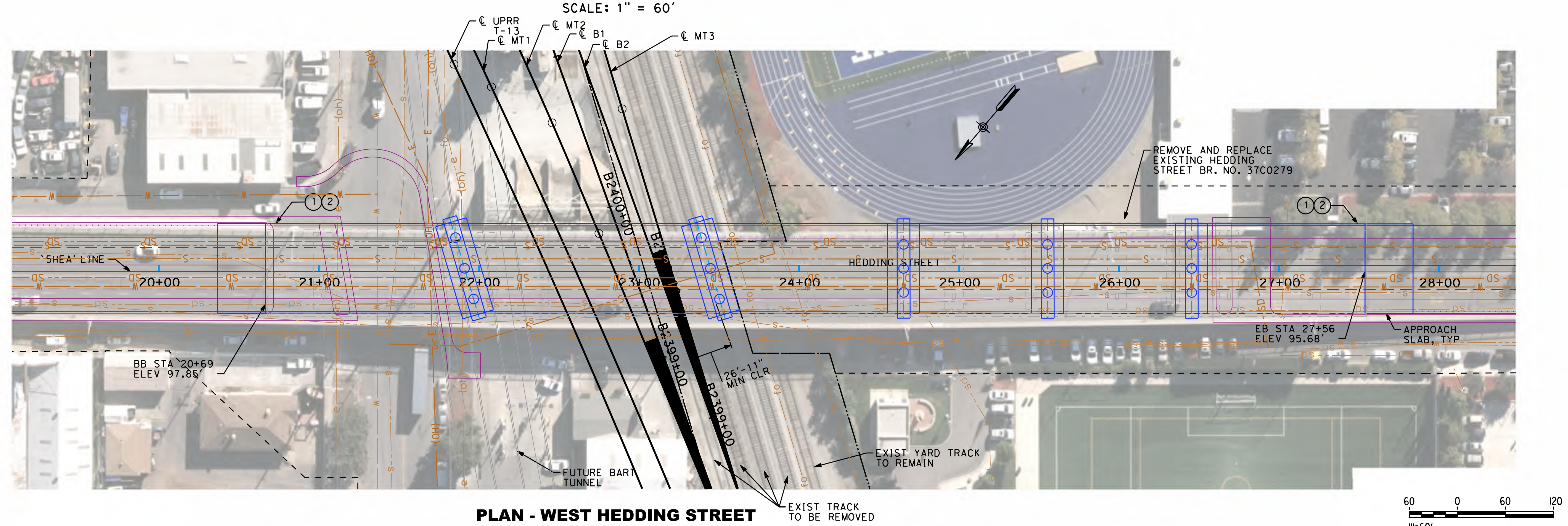

PLAN - WEST HEDDING STREET
SCALE: 1" = 60'

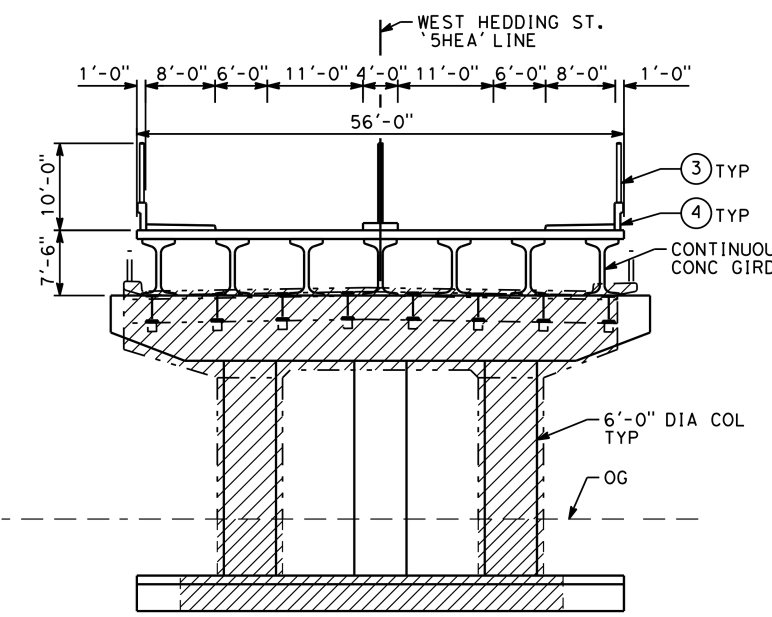

TYPICAL SECTION
SCALE: 1" = 20'

LEGEND:

- - - — EXISTING STRUCTURE
——— NEW CONSTRUCTION
▨ EXISTING BRIDGE TO BE REMOVED
(1) PAINT "HEDDING STREET OVERHEAD"
(2) PAINT "BRIDGE NO. XX-XXXX"
(3) CHAIN LINK RAILING TYPE 7, TYP (MOD)
(4) CONCRETE BARRIER TYPE 732, TYP

NOTES:

1. STRUCTURE LOCATED AT CALTRAIN MP 46.2.
2. ANY EXISTING UTILITY THAT CONFLICTS WITH NEW CONSTRUCTION SHALL BE RELOCATED UNLESS OTHERWISE NOTED.
3. VEHICULAR TRAFFIC WILL BE DETOURED DURING CONSTRUCTION.

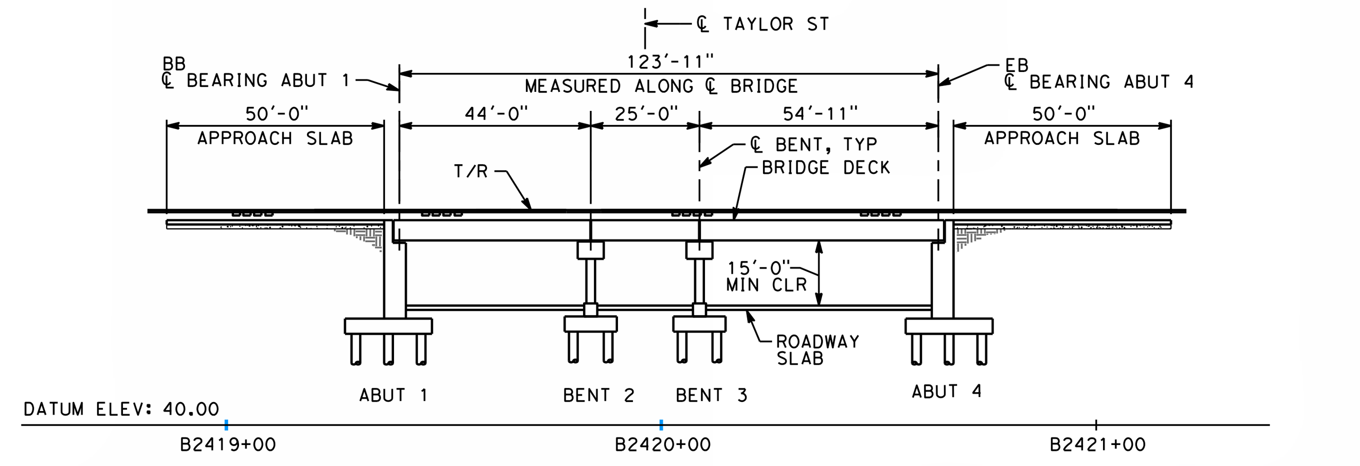

ELEVATION
SCALE: 1" = 20'

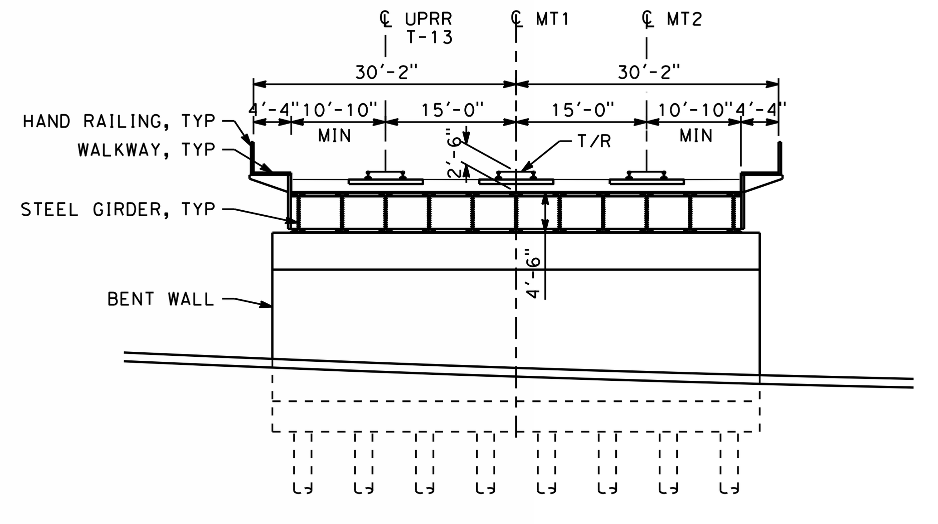

TYPICAL SECTION
SCALE: 1" = 10'

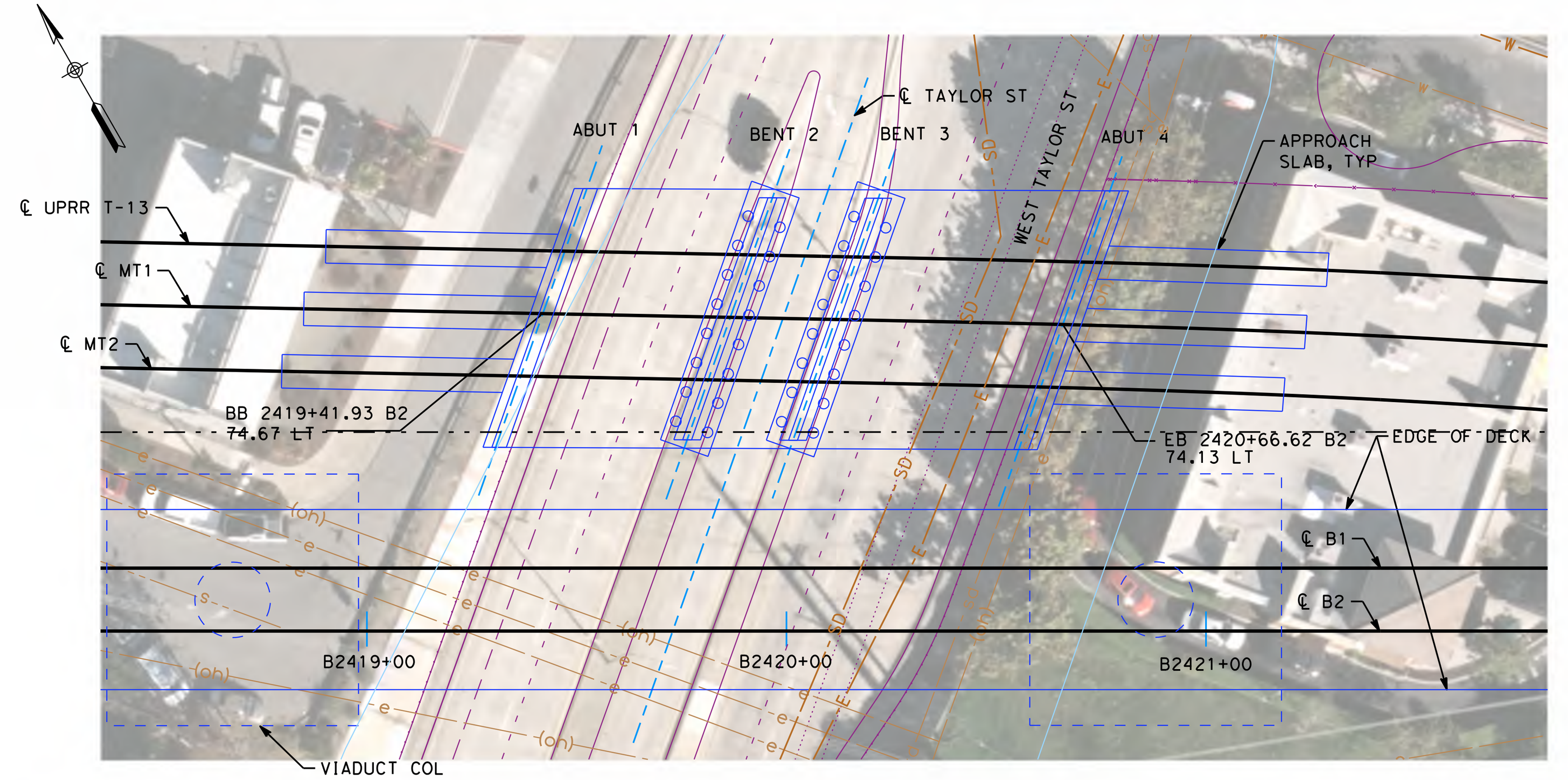

PLAN - TAYLOR STREET
SCALE: 1" = 20'

LEGEND:

- - - — EXISTING STRUCTURE
——— NEW CONSTRUCTION
▨ EXISTING BRIDGE TO BE REMOVED

NOTES:

1. STRUCTURE LOCATED AT CALTRAIN MP 46.52.
2. VEHICULAR TRAFFIC WILL BE DETOURED DURING CONSTRUCTION.
3. OCS MAST POLES WILL BE LOCATED OFF OF STRUCTURE.
4. ANY EXISTING UTILITY THAT CONFLICTS WITH NEW CONSTRUCTION SHALL BE RELOCATED UNLESS OTHERWISE NOTED.

SAN FRANCISCO TO SAN JOSE EIR/S: VOLUME III
ALTERNATIVE B
BOOK B5
SHEET 100 OF 142

RECORD PEPD SUBMITTAL
APRIL 11, 2019
NOT FOR CONSTRUCTION

HNTB
1111 Broadway
9th Floor
Oakland, CA 94607

CALIFORNIA High-Speed Rail Authority

CALIFORNIA HIGH-SPEED TRAIN PROJECT
SAN JOSE TO MERCED
SAN JOSE DIRIDON STATION APPROACH
VIADUCT TO I-880
OVERPASSES AND UNDERPASSES
HEDDING ST AND TAYLOR ST

CONTRACT NO. HSR15-34
DRAWING NO. ST-T0151
SCALE AS SHOWN
SHEET NO.

TABLE OF VIADUCT DIMENSIONS		
BENT	D1	D2
206	15'-0"	24'-0"
207	15'-0"	24'-0"
209	15'-0"	17'-0"
211	14'-0"	28'-0"

SAN FRANCISCO TO SAN JOSE EIR/S: VOLUME III
ALTERNATIVE B
BOOK B5
SHEET 101 OF 142

1"=20'

RECORD PEPD SUBMITTAL
APRIL 11, 2019
NOT FOR CONSTRUCTION

HNTB
1111 Broadway
9th Floor
Oakland, CA 94607

CALIFORNIA High-Speed Rail Authority

CALIFORNIA HIGH-SPEED TRAIN PROJECT
SAN JOSE TO MERCED
SAN JOSE DIRIDON STATION APPROACH
VIADUCT TO I-880
TYPICAL SECTIONS
SHEET 1 OF 3

CONTRACT NO. HSR15-34
DRAWING NO. ST-V0301
SCALE AS SHOWN
SHEET NO.

TABLE OF VIADUCT DIMENSIONS		
BENT	D1	D2
225	15'-4"	30'-0"
227	15'-0"	22'-8"
228	14'-2"	22'-8"
229	14'-2"	23'-0"

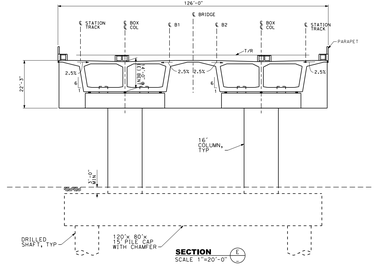

SECTION E
SCALE 1"=20'-0"

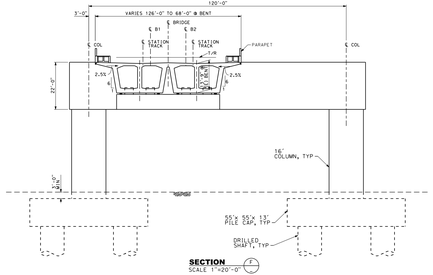

SECTION F
SCALE 1"=20'-0"

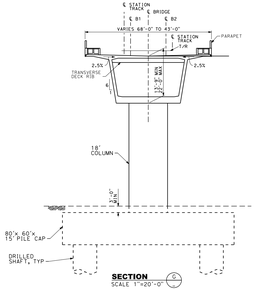

SECTION G
SCALE 1"=20'-0"

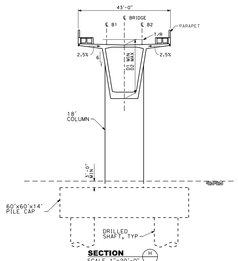

SECTION H
SCALE 1"=20'-0"

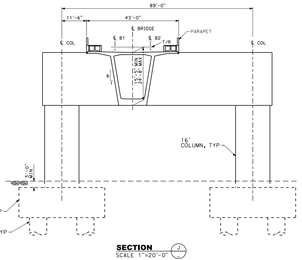

SECTION J
SCALE 1"=20'-0"

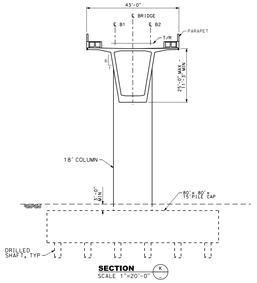

SECTION K
SCALE 1"=20'-0"

0 10 20
FEET

RECORD PDFO SUBMITTAL APRIL 11, 2019 NOT FOR CONSTRUCTION	MTB 1111 Broadway Suite 1500 Oakland, CA 94607	CALIFORNIA High-Speed Rail Authority	CALIFORNIA HIGH-SPEED TRAIN PROJECT SAN JOSE TO MERCED SAN JOSE DIRIDON STATION APPROACH VIADUCT TO I-880 TYPICAL SECTIONS SHEET 2 OF 3

PROJECT ID: HSR15-34
DRAWING NO: ST-V0302
SCALE: AS SHOWN
UNIT: IN

TABLE OF VIADUCT DIMENSIONS		
BENT	D1	D2
219	18'-9"	30'-0"
220	18'-9"	35'-0"

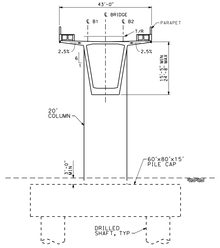

SECTION L
SCALE 1"=20'-0"

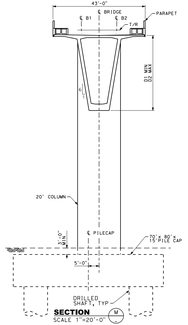

SECTION M
SCALE 1"=20'-0"

TABLE OF VIADUCT DIMENSIONS		
BENT	D1	D2
217	15'-6"	25'-0"
218	15'-6"	18'-9"
222	15'-6"	18'-9"
226	15'-0"	30'-0"
230	13'-0"	23'-0"

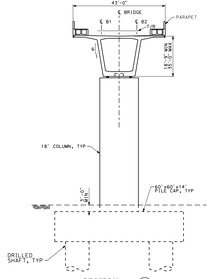

SECTION N
SCALE 1"=20'-0"

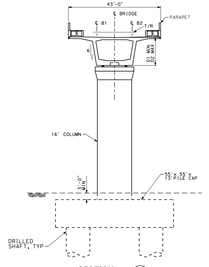

SECTION P
SCALE 1"=20'-0"

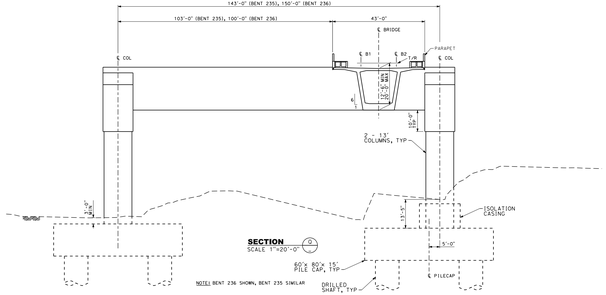

SECTION O
SCALE 1"=20'-0"

NOTE: BENT 236 SHOWN, BENT 235 SIMILAR

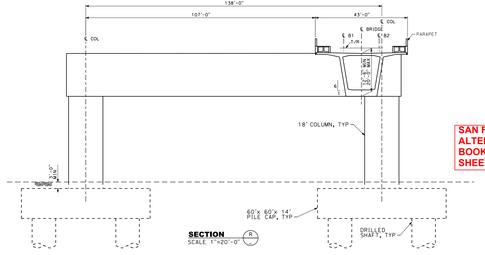

SECTION R
SCALE 1"=20'-0"

SAN FRANCISCO TO SAN JOSE EIR/S: VOLUME III
ALTERNATIVE B
BOOK B5
SHEET 103 OF 142

0 0 0 20
FT/M

RECORD PRPO SUBMITTAL APRIL 11, 2019 NOT FOR CONSTRUCTION	HNTB 111 Broadway Suite 1500 Oakland, CA 94607	CALIFORNIA High-Speed Rail Authority	CALIFORNIA HIGH-SPEED TRAIN PROJECT SAN JOSE TO MERCED SAN JOSE DIRIDON STATION APPROACH VIADUCT TO I-880 TYPICAL SECTIONS SHEET 3 OF 3

PROJECT ID	HSR15-34
DRAWING NO.	ST-VO303
SCALE	AS SHOWN
DATE	04/2019

CAD FILE: ST-VO303.dgn
USER: ALAN PLATT
DGN: ST-VO303.dgn
PLOT DATE: 4/11/2019

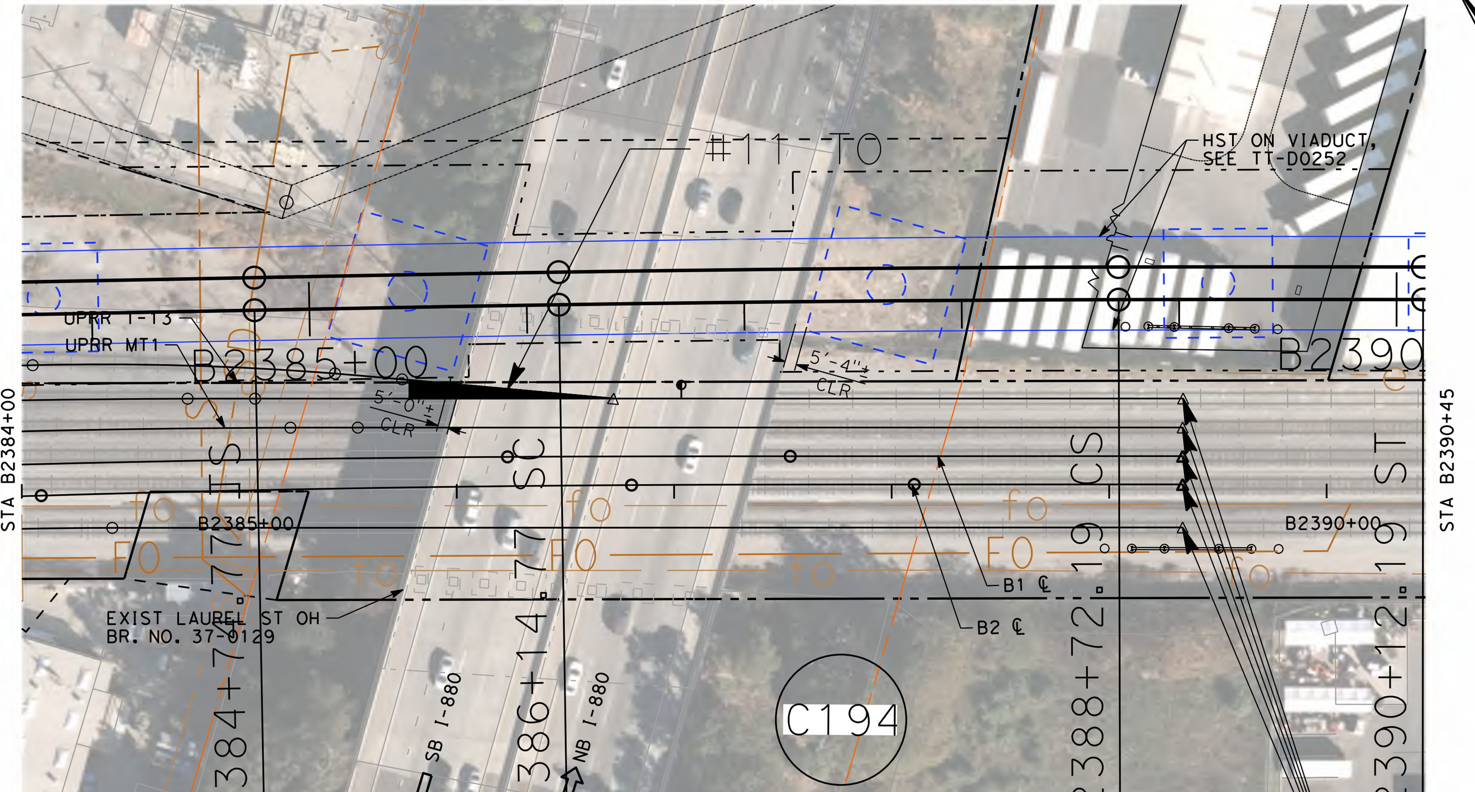

PLAN - I-880
SCALE: 1"=80'

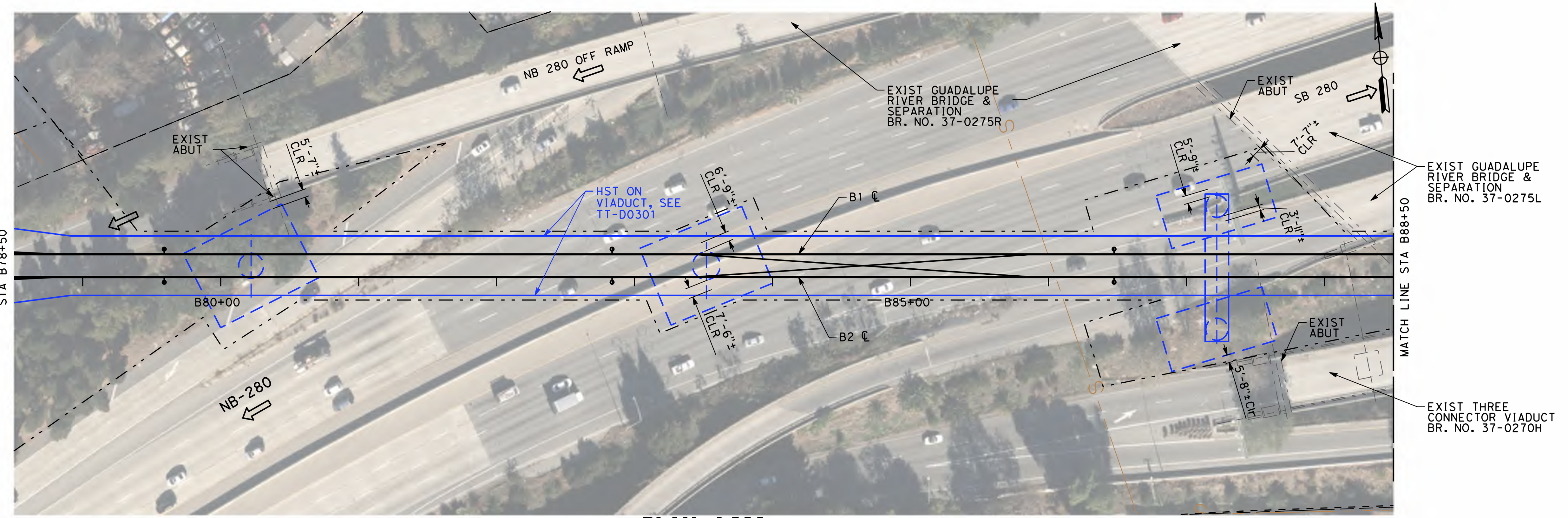

PLAN - I-280
SCALE: 1"=80'

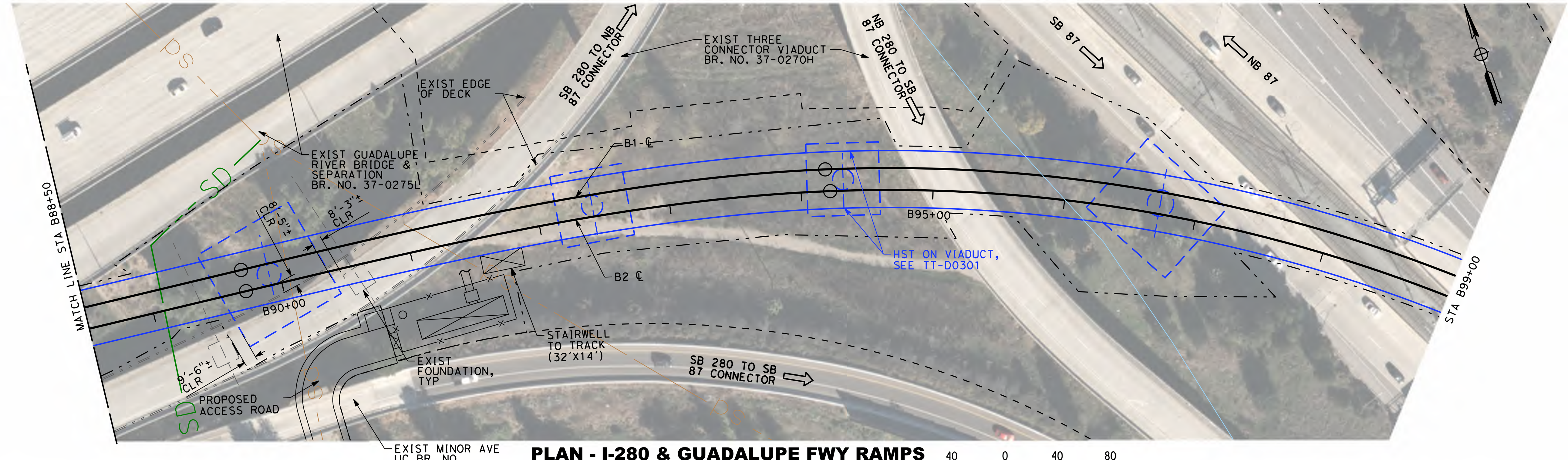

PLAN - I-280 & GUADALUPE FWY RAMPS
SCALE: 1"=80'

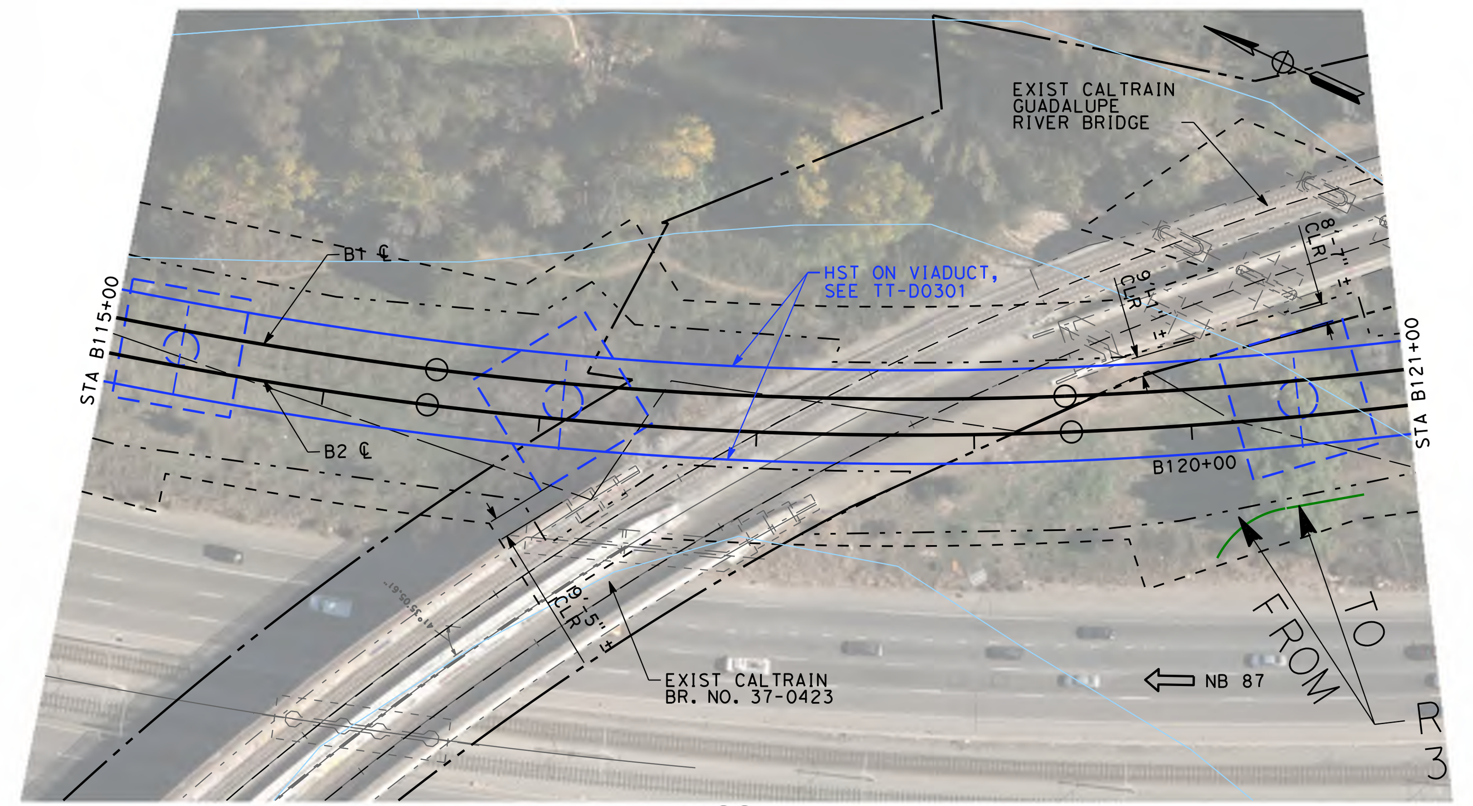

PLAN - FULLER UNDERPASS
SCALE: 1"=80'

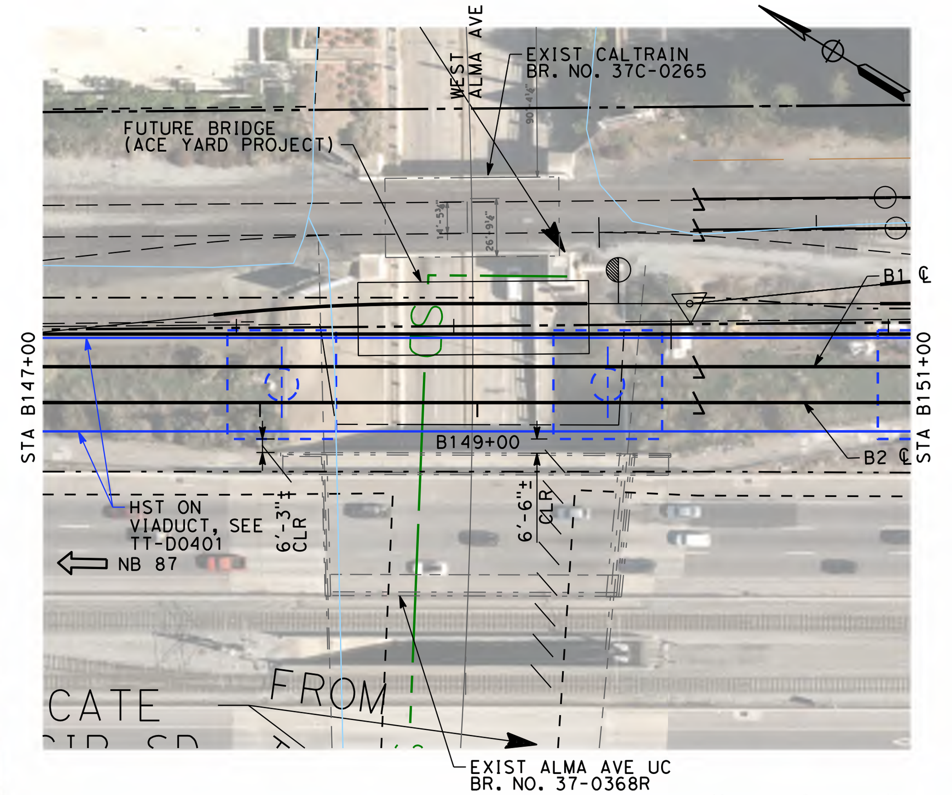

PLAN - WEST ALMA AVE
SCALE: 1"=80'

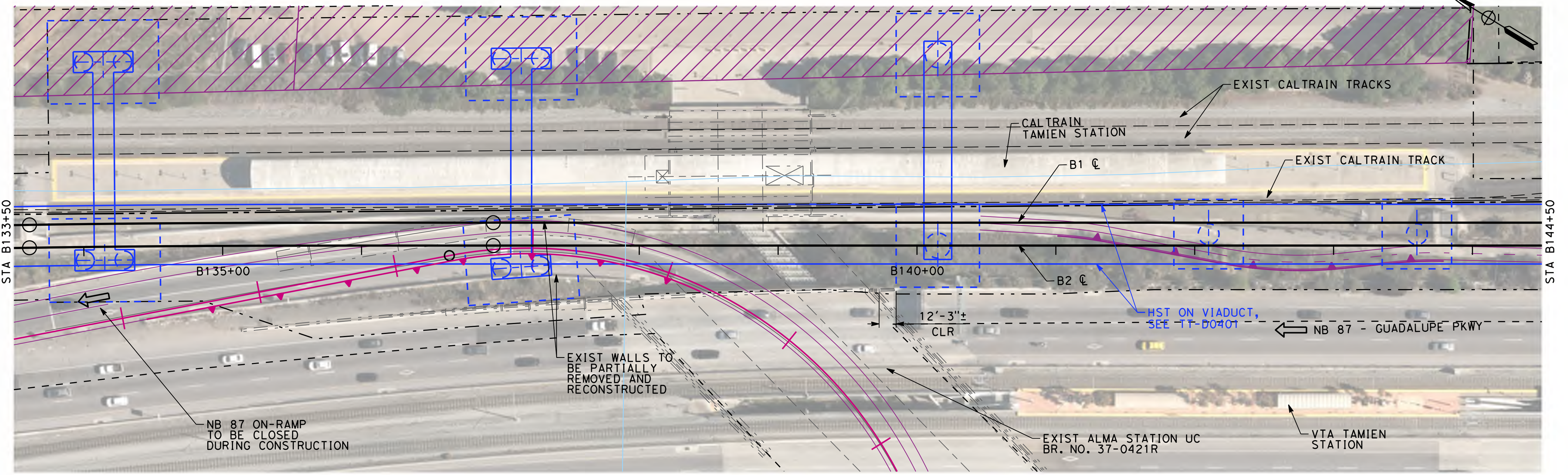

PLAN - TAMIEN STATION
SCALE: 1"=80'

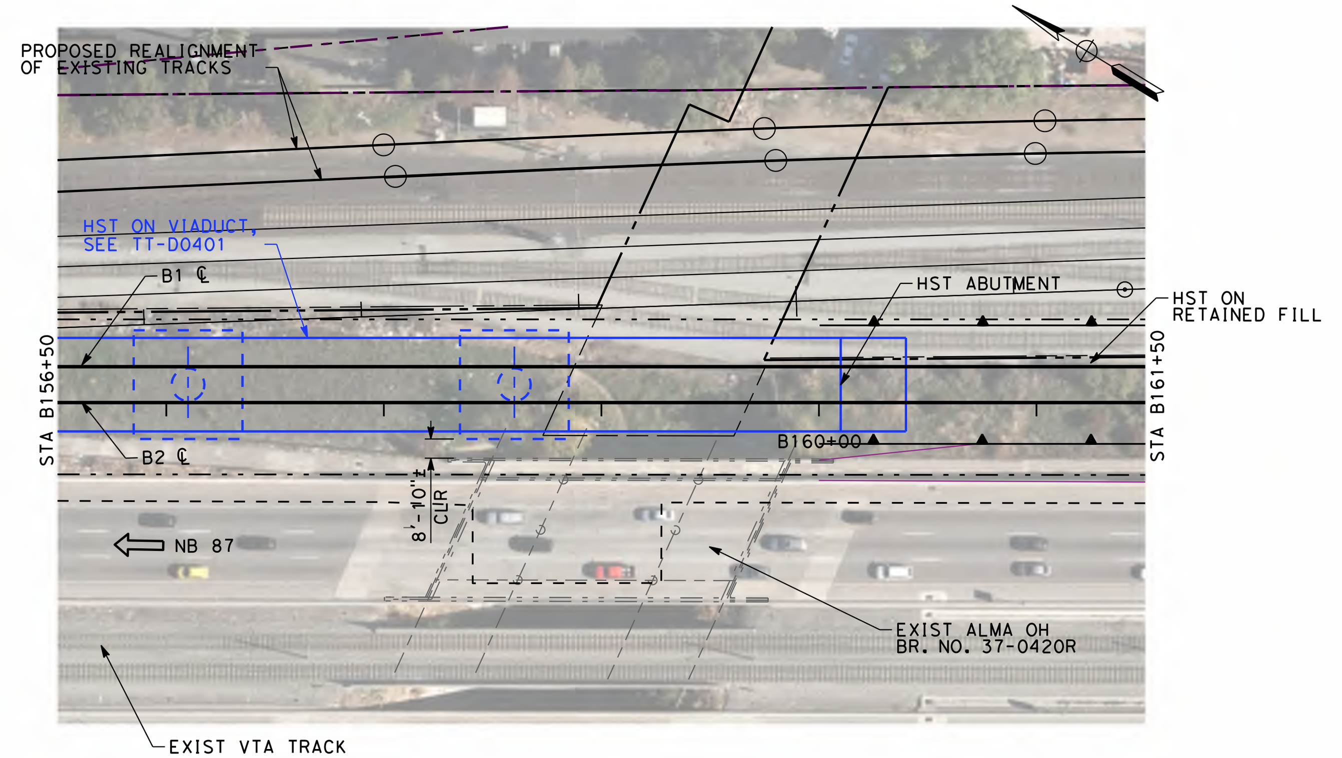

PLAN - ALMA OVERHEAD
SCALE: 1"=80'

SAN FRANCISCO TO SAN JOSE EIR/S: VOLUME III
ALTERNATIVE B
BOOK B5
SHEET 104 OF 142

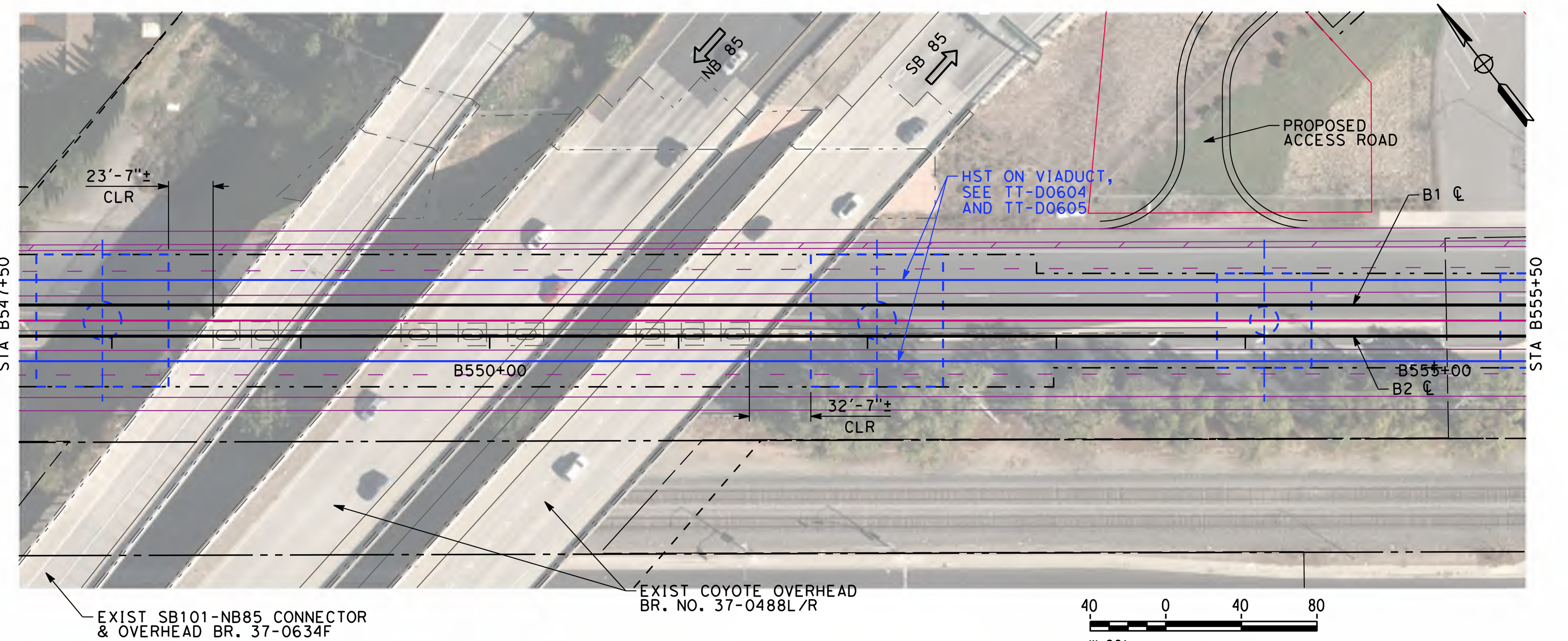

PLAN - COYOTE OVERHEAD
SCALE: 1"=80'

RECORD PEPD SUBMITTAL APRIL 11, 2019 NOT FOR CONSTRUCTION	HNTB 1111 Broadway 9th Floor Oakland, CA 94607	CALIFORNIA High-Speed Rail Authority	CALIFORNIA HIGH-SPEED TRAIN PROJECT SAN JOSE TO MERCED SAN JOSE DIRIDON STATION APPROACH VIADUCT TO I-880 CALTRANS STRUCTURES GENERAL PLAN	CONTRACT NO. HSR15-34 DRAWING NO. ST-T0301 SCALE AS SHOWN SHEET NO.

rdeleon 4/30/2019 3:49:49 PM CAHSRP.tbl cvd_pdf_bw.pltcfg c:\caddlib\pw\rdeleon\46037_cahsr\dms17595\JM-RP-ST-T0301.dgn

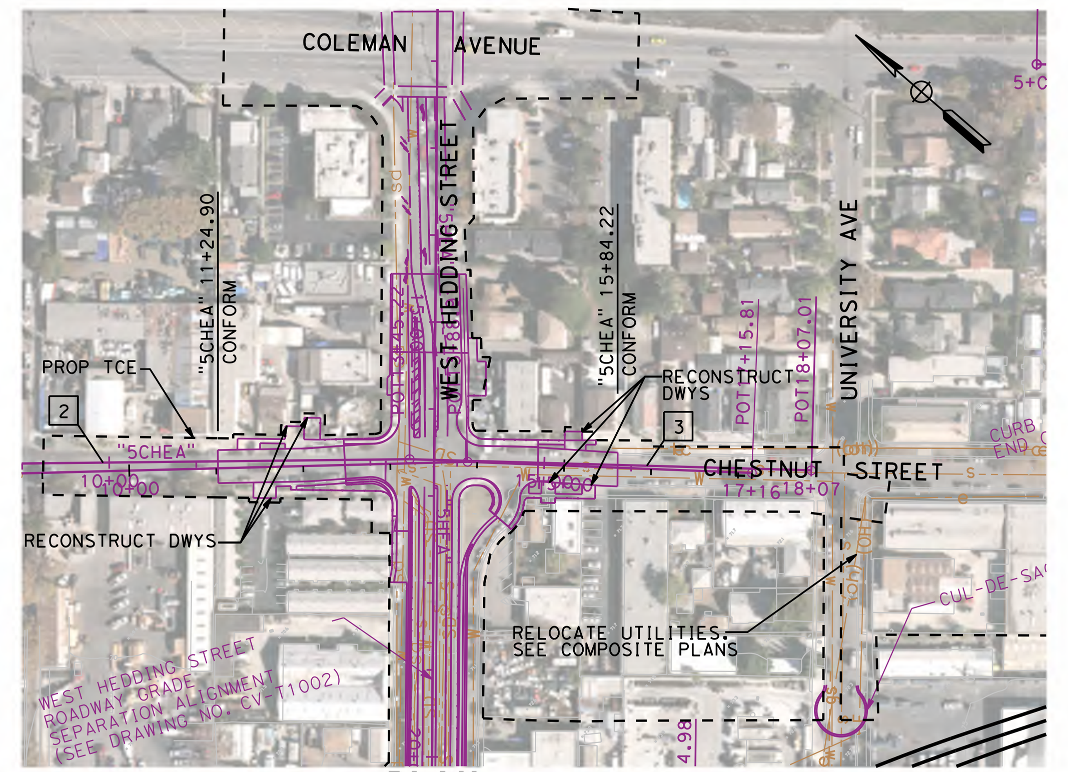

PLAN
CHESTNUT AVENUE
SCALE: 1"=200'

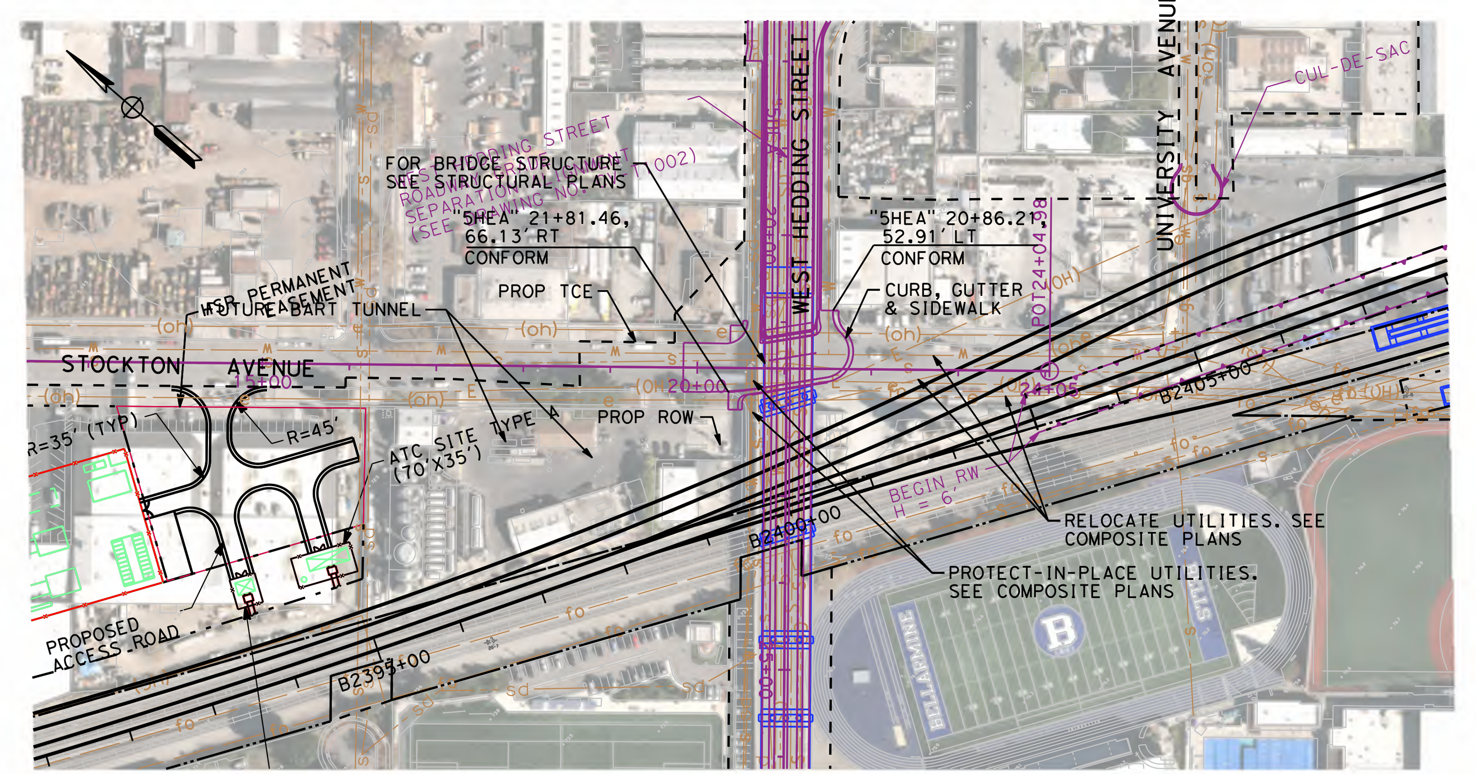

PLAN
STOCKTON AVENUE
SCALE: 1"=200'

LINE DATA

NO.	BEARING	LENGTH
2	S 41°26'58" E	595.22'
3	S 39°13'42" E	461.79'

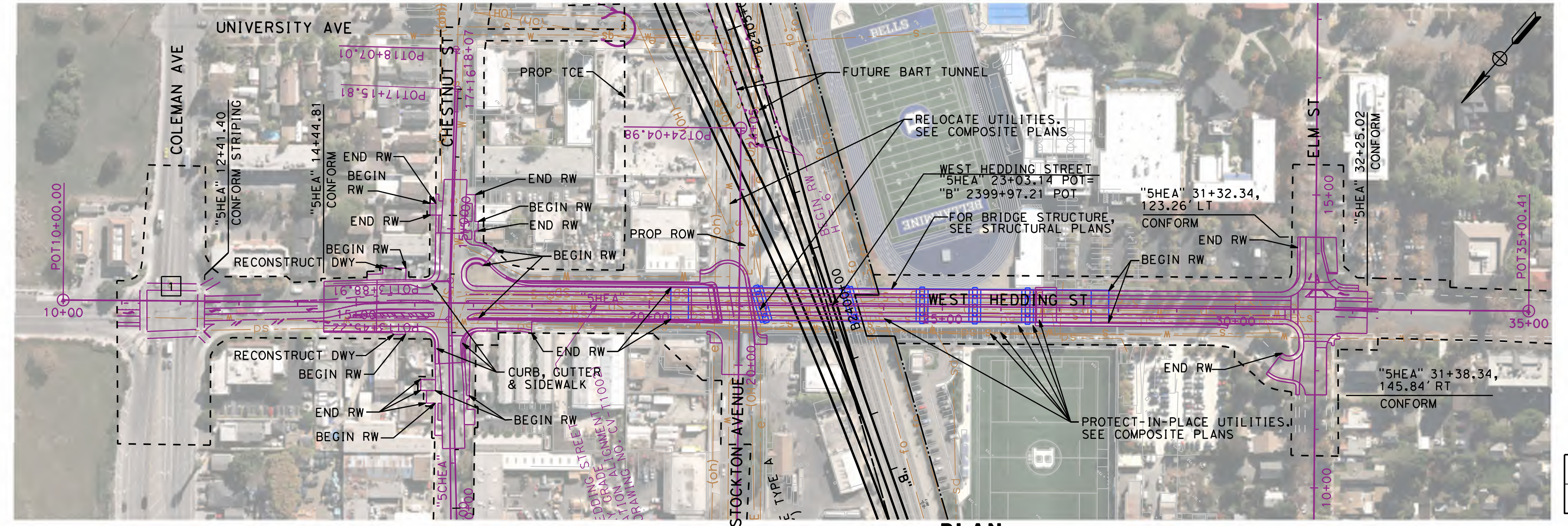

PLAN
WEST HEDDING STREET
SCALE: 1"=200'

LINE DATA

NO.	BEARING	LENGTH
1	S 49°36'57" W	2500.00'

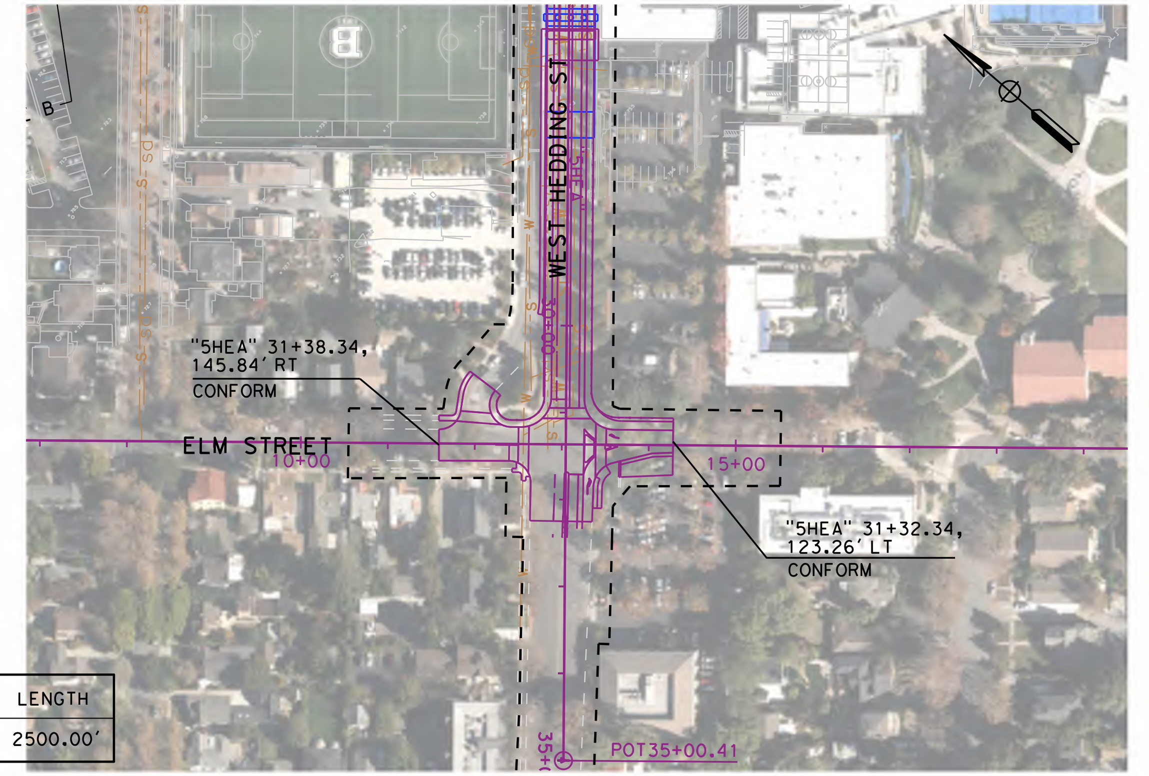

PLAN
ELM STREET
SCALE: 1"=200'

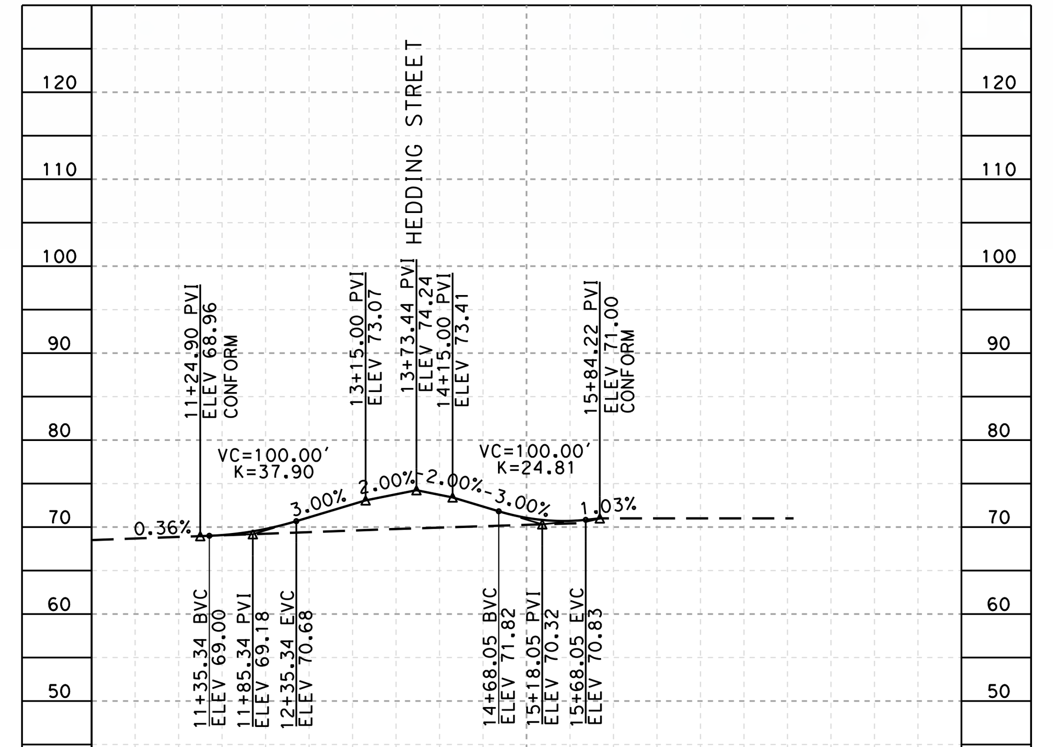

PROFILE
CHESTNUT AVENUE
SCALE: 1"=200' HOR, 1"=20' VERT

NO PROFILE REQUIRED

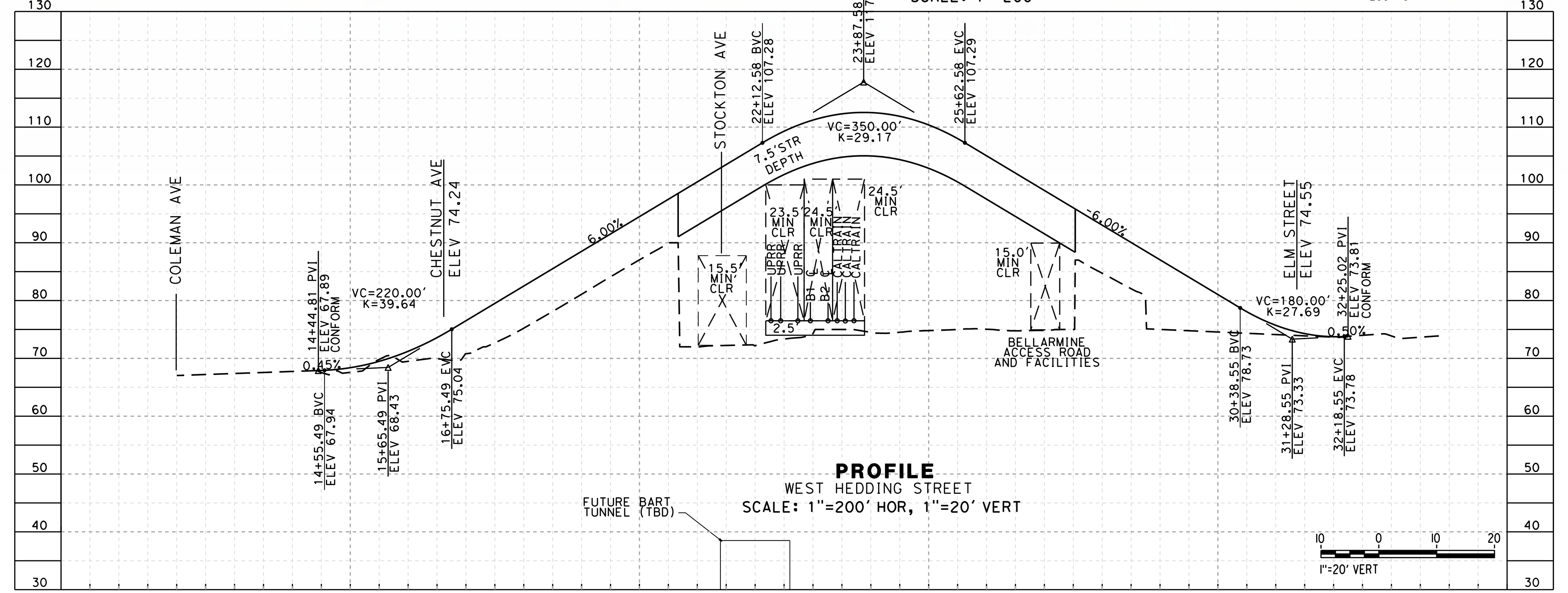

PROFILE
WEST HEDDING STREET
SCALE: 1"=200' HOR, 1"=20' VERT

NO PROFILE REQUIRED

NOTES:

1. DESIGN SPEED (WEST HEDDING ST) = 35 MPH
2. FALSEWORKS ARE NOT CONSIDERED IN VERTICAL CLEARANCES.

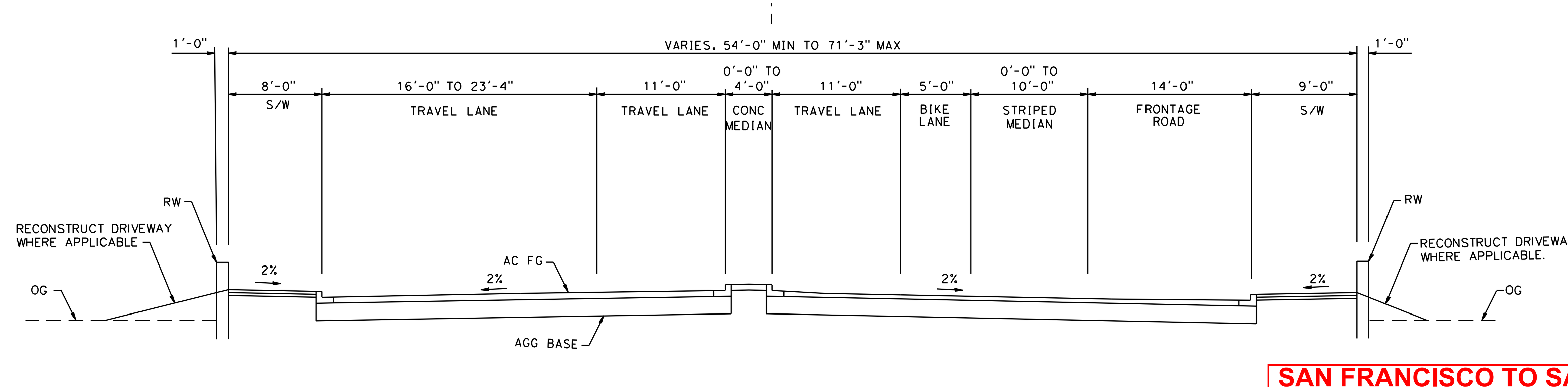

TYPICAL SECTION
WEST HEDDING STREET
"SHEA" 14+44.80 TO 16+24

SAN FRANCISCO TO SAN JOSE EIR/S: VOLUME III
ALTERNATIVE B
BOOK B5
SHEET 105 OF 142

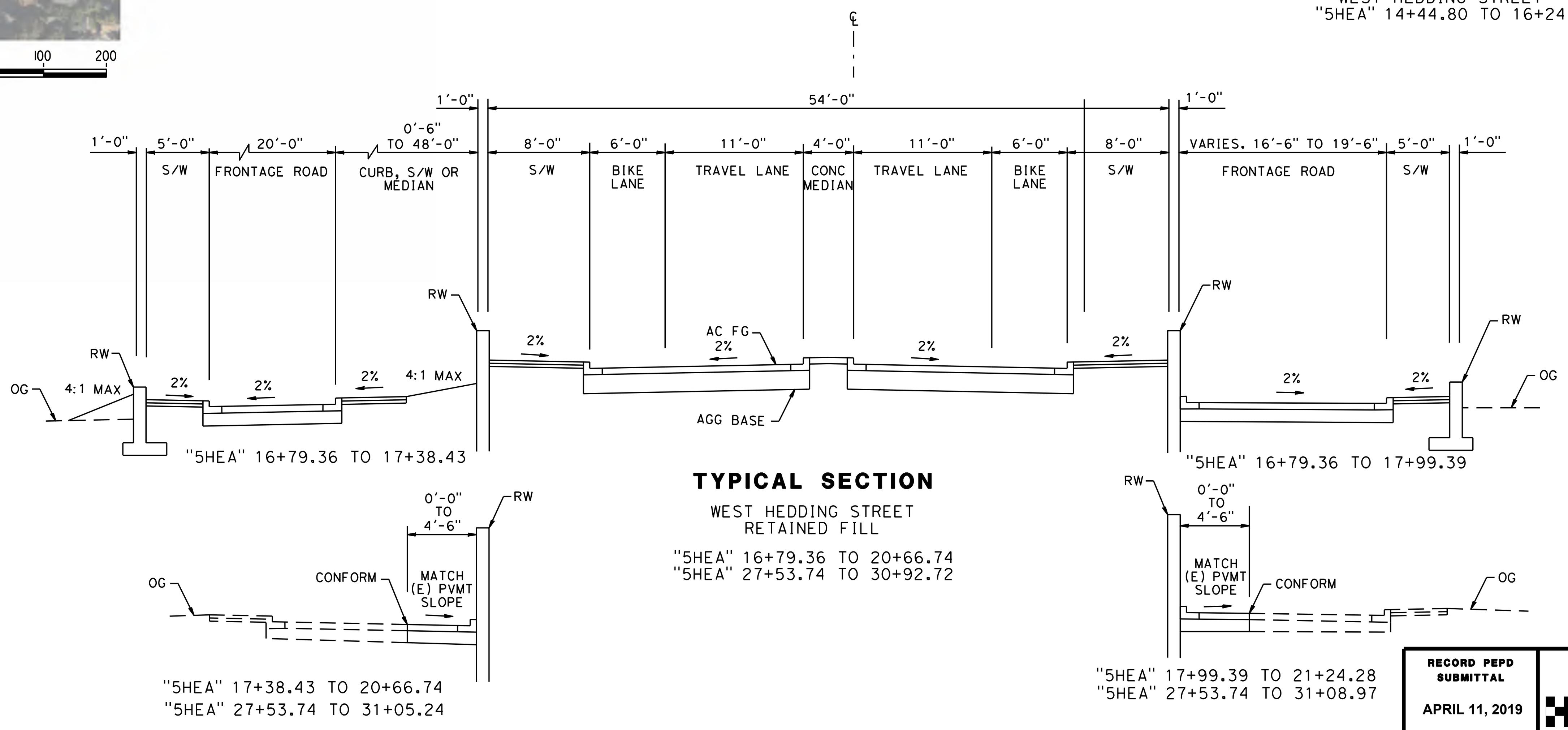

TYPICAL SECTION
WEST HEDDING STREET
RETAINED FILL
"SHEA" 16+79.36 TO 20+66.74
"SHEA" 27+53.74 TO 30+92.72

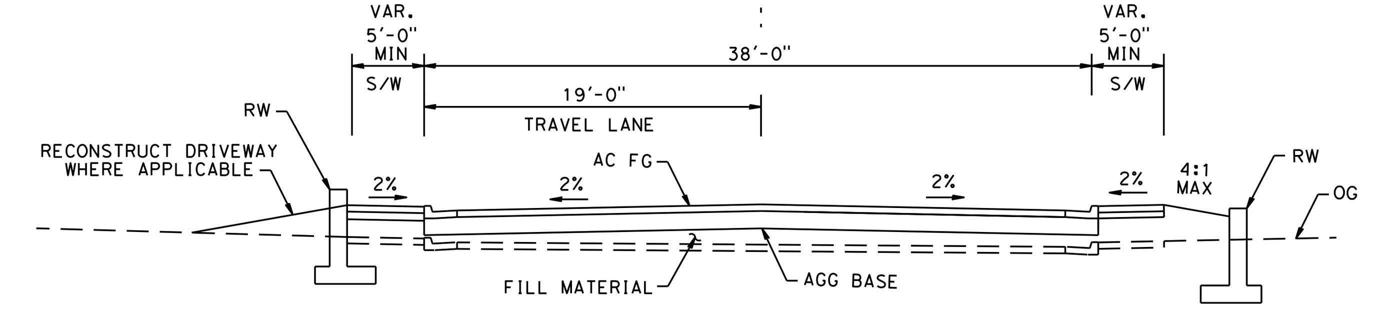

TYPICAL SECTION
CHESTNUT STREET
"SHEA" 11+24.88 TO 15+84.22

RECORD PEPD SUBMITTAL
APRIL 11, 2019
NOT FOR CONSTRUCTION

HNTB
1111 Broadway
9th Floor
Oakland, CA 94607

CALIFORNIA
High-Speed Rail Authority

CALIFORNIA HIGH-SPEED TRAIN PROJECT
SAN JOSE TO MERCED
SAN JOSE DIRIDON STATION APPROACH
VIADUCT TO I-880
PLAN, PROFILE AND TYPICAL SECTIONS
WEST HEDDING STREET

CONTRACT NO.	HSR15-34
DRAWING NO.	CV-T0151
SCALE	AS SHOWN
SHEET NO.	

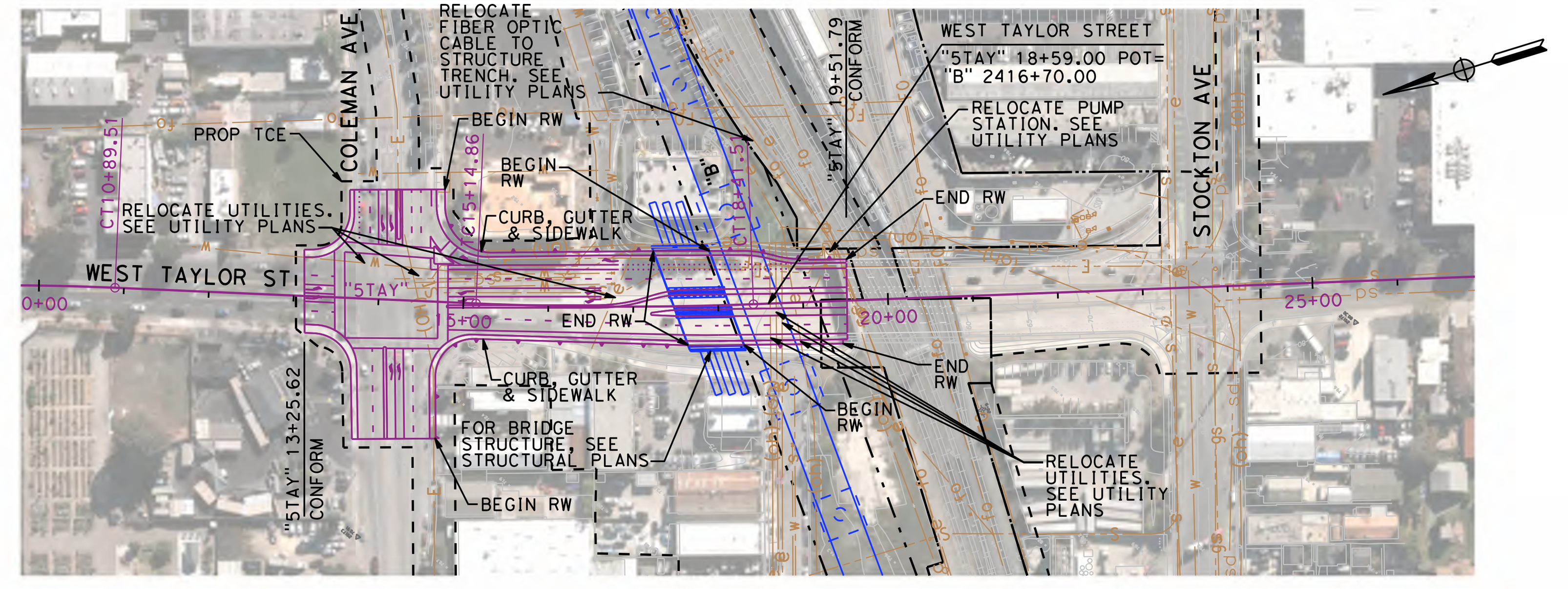

PLAN

WEST TAYLOR ST

SCALE: 1"=200'

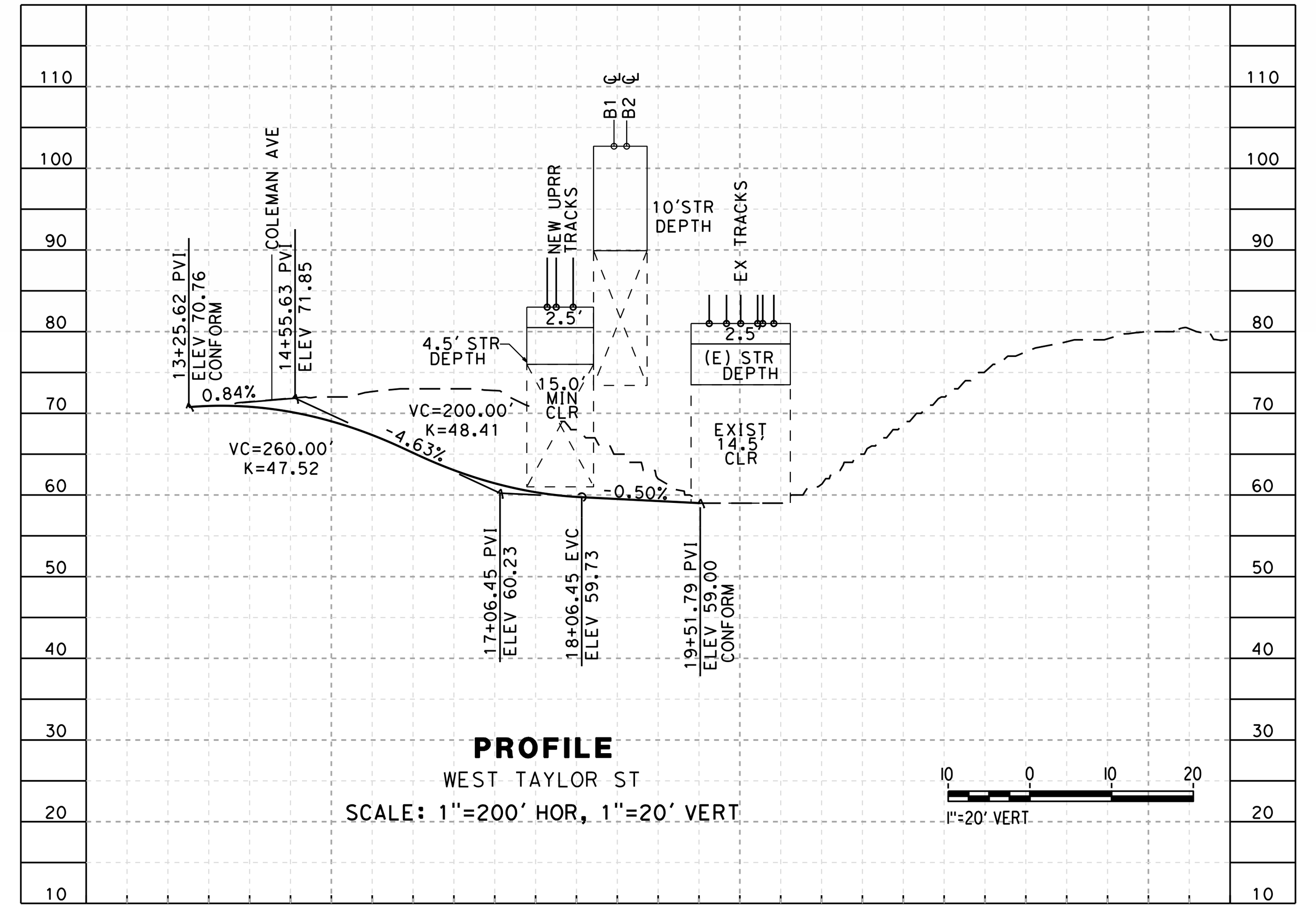

PROFILE

WEST TAYLOR ST

SCALE: 1"=200' HOR, 1"=20' VERT

CURVE DATA

NO.	RADIUS	DELTA	TANGENT	LENGTH
(1)	3000.00'	4°07'59"	108.25'	216.41'
(2)	4000.00'	4°40'44"	163.42'	326.65'
(3)	3000.00'	1°22'41"	36.08'	72.16'

LINE DATA

NO.	BEARING	LENGTH
[1]	S 48°39'06" W	373.11'
[2]	S 52°47'05" W	425.35'
[3]	S 48°06'21" W	970.98'
[4]	S 49°29'03" W	615.19'

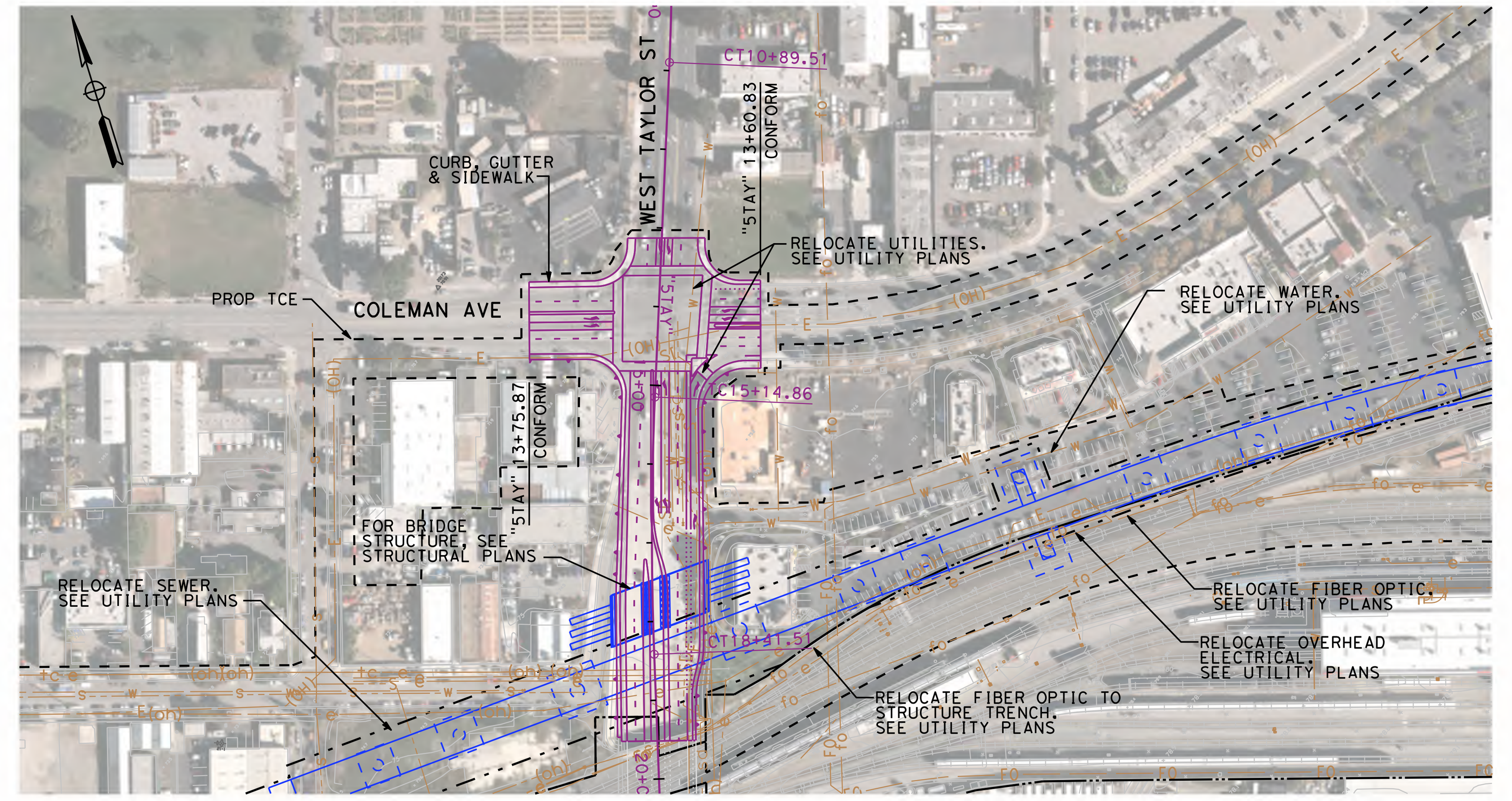

PLAN

COLEMAN AVENUE

SCALE: 1"=200'

NO PROFILE REQUIRED

NOTES:

1. DESIGN SPEED (WEST TAYLOR ST) = 35 MPH.
2. FALSEWORK ARE NOT CONSIDERED FOR VERTICAL CLEARANCES.

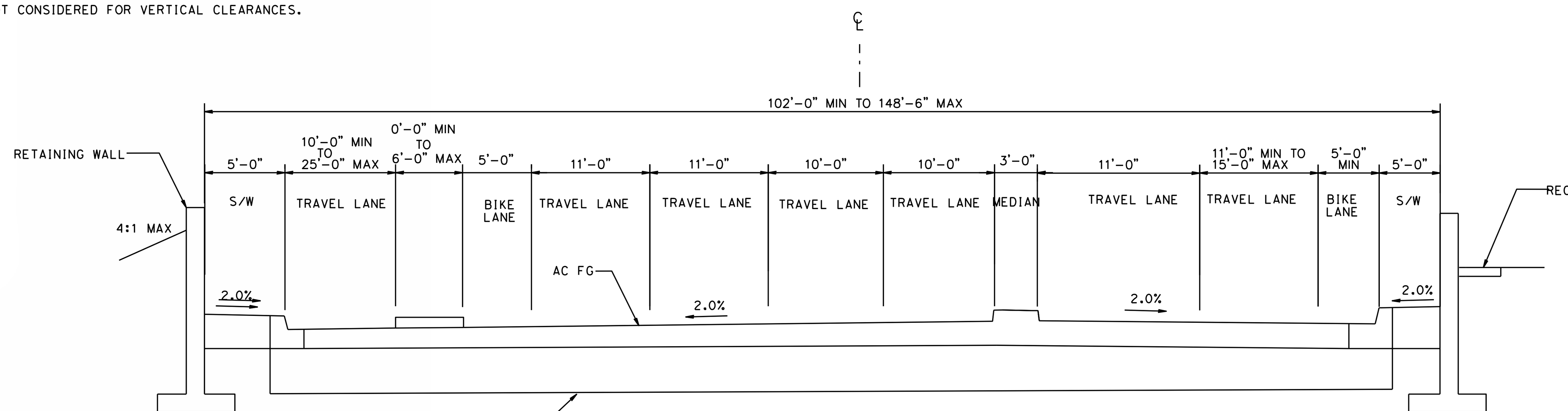

TYPICAL SECTION

WEST TAYLOR STREET

"STAY" 14+80 TO 15+34

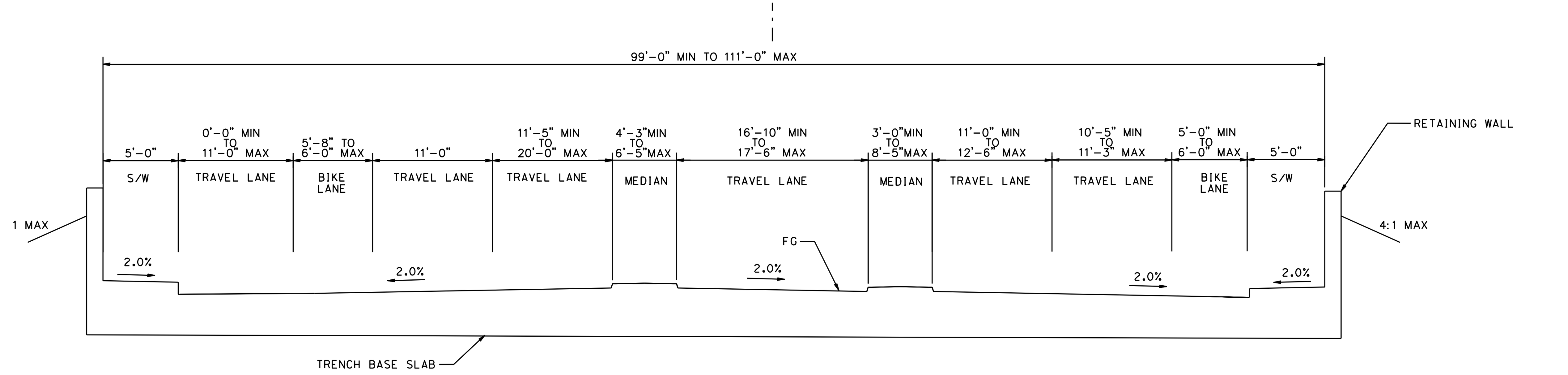

TYPICAL SECTION

WEST TAYLOR STREET

"STAY" 17+20.00 TO 19+51.79

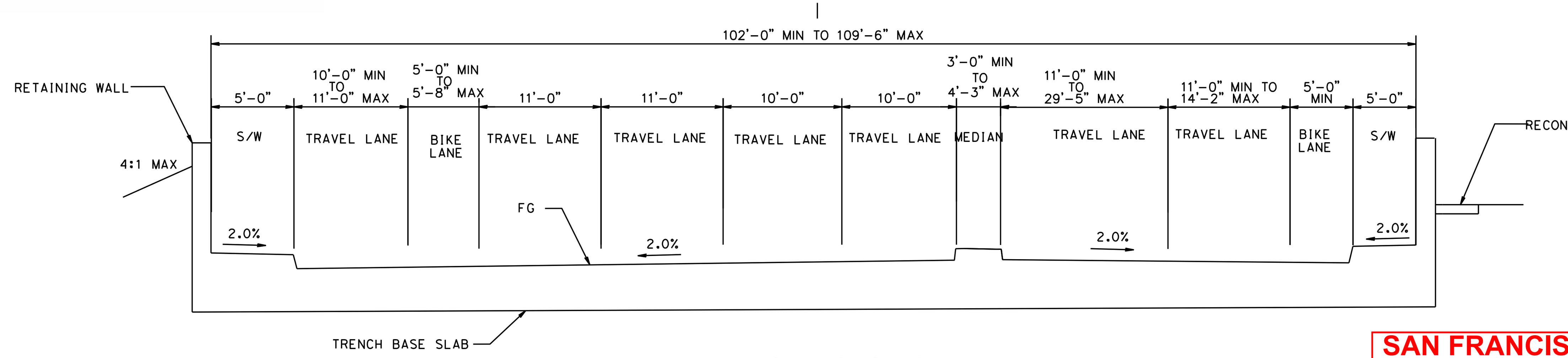

TYPICAL SECTION

WEST TAYLOR STREET

"STAY" 15+34 TO 17+20

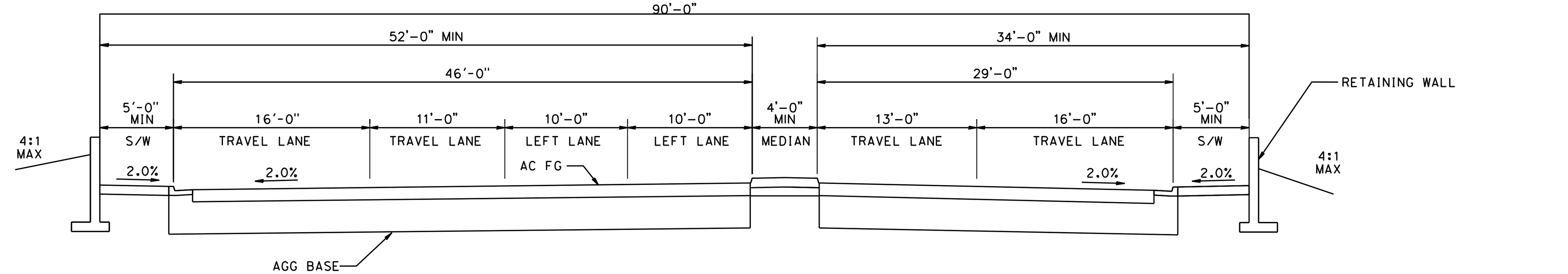

TYPICAL SECTION

COLEMAN AVENUE

SAN FRANCISCO TO SAN JOSE EIR/S: VOLUME III
ALTERNATIVE B
BOOK B5
SHEET 106 OF 142

RECORD PEPD SUBMITTAL

APRIL 11, 2019

NOT FOR CONSTRUCTION

HNTB 1111 Broadway 9th Floor Oakland, CA 94607

CALIFORNIA High-Speed Rail Authority

CALIFORNIA HIGH-SPEED TRAIN PROJECT
SAN JOSE TO MERCED
SAN JOSE DIRIDON STATION APPROACH
VIADUCT TO I-880
PLAN, PROFILE AND TYPICAL SECTIONS
WEST TAYLOR STREET

CONTRACT NO. HSR15-34

DRAWING NO. CV-T0152

SCALE AS SHOWN

SHEET NO.

CURVE	ELEMENT	POINT TYPE	MT2 TRACK STATION	COORDINATES		RADIUS (FT)	LENGTH (FT)	DELTA, Δ	K	P	DESIGN SPEED (MPH)	ACTUAL SUPERELEVATION (EA) (IN)	UNBALANCED SUPERELEVATION (EA) (IN)	BEARING (0°00'00") (TANGENT)	WCB (0°00'00")	
				NORTHING	EASTING										START ANGLE	END ANGLE
	Tangent	POB	2260+30.01	1958137.752	6137507.790									S 60°29'13" E		
	Tangent	PI	2301+23.27	1956121.329	6141069.924											
	Tangent	PI	2301+23.27	1956121.329	6141069.924									S 60°29'51" E		
	Tangent	TS	2324+15.29	1954992.594	6143064.748											
	Clothoid	TS	2324+15.29	1954992.594	6143064.748										S 60°29'51" E	S 60°27'06" E
	Clothoid	SPI	2324+68.63	1954966.330	6143111.166		80	0°02'45"	40	0.01						
	Clothoid	SC	2324+95.29	1954953.179	6143134.365											
	Arc	SC	2324+95.29	1954953.179	6143134.365											
C189	Arc	PI	2325+54.25	1954924.102	6143185.656	50000	117.92	0°08'06"			110	0.75	0.22			
	Arc	CC		1911456.208	6118476.435											
	Arc	CS	2326+13.21	1954894.905	6143236.878											
	Clothoid	CS	2326+13.21	1954894.905	6143236.878										S 60°18'59" E	S 60°16'14" E
	Clothoid	SPI	2326+39.88	1954881.699	6143260.046		80	0°02'45"	40	0.01						
	Clothoid	ST	2326+93.21	1954855.251	6143306.359											
	Tangent	ST	2326+93.21	1954855.251	6143306.359									S 60°16'14" E		
	Tangent	TS	2329+56.62	1954724.625	6143535.098											
	Clothoid	TS	2329+56.62	1954724.625	6143535.098										S 60°16'14" E	S 59°41'38" E
	Clothoid	SPI	2330+86.62	1954660.157	6143647.988		195	0°34'37"	97.5	0.16						
	Clothoid	SC	2331+51.62	1954627.357	6143704.106											
	Arc	SC	2331+51.62	1954627.357	6143704.106											
C190	Arc	PI	2333+47.66	1954528.430	6143873.356	9683.84	392.03	2°19'10"			110	2.25	2.75			
	Arc	CC		1946266.904	6138817.431											
	Arc	CS	2335+43.65	1954422.735	6144038.463											
	Clothoid	CS	2335+43.65	1954422.735	6144038.463										S 57°22'27" E	S 56°47'51" E
	Clothoid	SPI	2336+08.65	1954387.690	6144093.207		195	0°34'37"	97.5	0.16						
	Clothoid	ST	2337+38.65	1954316.502	6144201.984											

SAN FRANCISCO TO SAN JOSE EIR/S: VOLUME III
ALTERNATIVE B
BOOK B5
SHEET 107 OF 142

REV	DATE	BY	CHK	APP	DESCRIPTION

DESIGNED BY
DRAWN BY
CHECKED BY
IN CHARGE
DATE

RECORD PEPD SUBMITTAL
APRIL 11, 2019
NOT FOR CONSTRUCTION

HNTB
1111 Broadway
9th Floor
Oakland, CA 94607

CALIFORNIA High-Speed Rail Authority

CALIFORNIA HIGH-SPEED TRAIN PROJECT
SAN JOSE TO MERCED
SAN JOSE DIRIDON STATION APPROACH
VIADUCT TO I-880
TRACK ALIGNMENT DATA TABLE
CURVE NO. C189 AND C190

CONTRACT NO. HSR15-34
DRAWING NO. TT-B0101-JM
SCALE NONE
SHEET NO.

rdeleon 4/30/2019 5:23:04 PM CAHSRP.tbl cvd_pdf_bw.pltcfg c:\caddlib\pw\rdeleon\46037_cahsr\dms18473\FJ-TT-B0101-JM.dgn

CURVE	ELEMENT	POINT TYPE	MT2 TRACK STATION	COORDINATES		RADIUS (FT)	LENGTH (FT)	DELTA, Δ	K	P	DESIGN SPEED (MPH)	ACTUAL SUPERELEVATION (EA) (IN)	UNBALANCED SUPERELEVATION (EA) (IN)	BEARING (0°00'00") (TANGENT)	WCB (0°00'00")	
				NORTHING	EASTING										START ANGLE	END ANGLE
	Tangent	ST	2337+38.65	1954316.502	6144201.984									S 56°47'51" E		
	Tangent	PI	2363+76.23	1952872.160	6146408.951											
	Tangent	PI	2363+76.23	1952872.160	6146408.951									S 56°48'33" E		
	Tangent	TS	2388+65.23	1951509.611	6148491.882											
	Clothoid	TS	2388+65.23	1951509.611	6148491.882										S 56°48'33" E	S 57°19'49" E
	Clothoid	SPI	2389+98.57	1951436.620	6148603.463		200	0°31'15"	100	0.15						
	Clothoid	SC	2390+65.23	1951400.634	6148659.583											
	Arc	SC	2390+65.23	1951400.634	6148659.583											
C191	Arc	PI	2392+92.09	1951278.175	6148850.552	11000	453.65	2°21'47"			110	2.00	2.40			
	Arc	CC		1960660.379	6154597.352											
	Arc	CS	2395+18.89	1951163.695	6149046.408											
	Clothoid	CS	2395+18.89	1951163.695	6149046.408										S 59°41'35" E	S 60°12'50" E
	Clothoid	SPI	2395+85.55	1951130.053	6149103.964		200	0°31'15"	100	0.15						
	Clothoid	ST	2397+18.89	1951063.817	6149219.682											
	Tangent	ST	2397+18.89	1951063.817	6149219.682									S 60°12'50" E		
	Tangent	TS	2424+18.11	1949722.946	6151562.302											
	Cosine	TS	2424+18.11	1949722.946	6151562.302										S 60°12'50" E	S 56°36'41" E
	Cosine	SPI	2427+09.75	1949578.067	6151815.418		415	3°36'10"	207.49	1.24						
	Cosine	SC	2428+33.11	1949510.131	6151918.493											
	Arc	SC	2428+33.11	1949510.131	6151918.493											
C192	Arc	PI	2431+48.33	1949336.657	6152181.693	3300	628.54	10°54'47"			75	3.50	3.32			
	Arc	CC		1946754.775	6150102.450											
	Arc	CS	2434+61.63	1949116.492	6152407.291											
	Cosine	CS	2434+61.63	1949116.492	6152407.291										S 45°41'54" E	S 42°05'44" E
	Cosine	SPI	2435+85.08	1949030.271	6152495.640		415	3°36'10"	207.49	1.24						
	Cosine	ST	2438+76.63	1948813.861	6152691.151											

SAN FRANCISCO TO SAN JOSE EIR/S: VOLUME III
ALTERNATIVE B
BOOK B5
SHEET 108 OF 142

REV	DATE	BY	CHK	APP	DESCRIPTION

DESIGNED BY
DRAWN BY
CHECKED BY
IN CHARGE
DATE

RECORD PEPD SUBMITTAL
APRIL 11, 2019
NOT FOR CONSTRUCTION

HNTB
1111 Broadway
9th Floor
Oakland, CA 94607

CALIFORNIA High-Speed Rail Authority

CALIFORNIA HIGH-SPEED TRAIN PROJECT
SAN JOSE TO MERCED
SAN JOSE DIRIDON STATION APPROACH
VIADUCT TO I-880
TRACK ALIGNMENT DATA TABLE
CURVE NO. C191 AND C192

CONTRACT NO. HSR15-34
DRAWING NO. TT-B0102-JM
SCALE NONE
SHEET NO.

rdeleon 4/30/2019 5:23:14 PM CAHSRP.tbl cvd_pdf_bw.pltcfg c:\caddlib\pw\rdeleon\46037_cahsr\dms18473\FJ-TT-B0102-JM.dgn

CURVE	ELEMENT	POINT TYPE	MT2 TRACK STATION	COORDINATES		RADIUS (FT)	LENGTH (FT)	DELTA, Δ	K	P	DESIGN SPEED (MPH)	ACTUAL SUPERELEVATION (EA) (IN)	UNBALANCED SUPERELEVATION (EA) (IN)	BEARING (0°00'00") (TANGENT)	WCB (0°00'00")	
				NORTHING	EASTING										START ANGLE	END ANGLE
	Tangent	ST	2438+76.63	1948813.861	6152691.151									S 42°05'44" E		
	Tangent	TS	2441+29.45	1948626.259	6152860.635											
	Cosine	TS	2441+29.45	1948626.259	6152860.635										S 42°05'44" E	S 35°00'43" E
	Cosine	SPI	2445+26.71	1948331.485	6153126.943		565	7°05'01"	282.44	3.31						
	Cosine	SC	2446+94.45	1948193.686	6153223.474											
	Arc	SC	2446+94.45	1948193.686	6153223.474											
C193	Arc	PI	2451+97.72	1947781.493	6153512.224	2285	990.72	24°50'31"			65	4.75	2.65			
	Arc	CC		1946882.673	6151351.986											
	Arc	CS	2456+85.09	1947286.131	6153601.085											
	Cosine	CS	2456+85.09	1947286.131	6153601.085										S 10°10'12" E	S 3°05'11" E
	Cosine	SPI	2458+53.34	1947120.528	6153630.792		565	7°05'01"	282.44	3.31						
	Cosine	ST	2462+50.09	1946723.849	6153652.180											
	Tangent	ST	2462+50.09	1946723.849	6153652.180									S 3°05'11" E		
	Tangent	POE	2481+32.12	1944844.556	6153753.509											

SAN FRANCISCO TO SAN JOSE EIR/S: VOLUME III
ALTERNATIVE B
BOOK B5
SHEET 109 OF 142

REV	DATE	BY	CHK	APP	DESCRIPTION

DESIGNED BY
DRAWN BY
CHECKED BY
IN CHARGE
DATE

RECORD PEPD SUBMITTAL

APRIL 11, 2019

NOT FOR CONSTRUCTION

HNTB
1111 Broadway
9th Floor
Oakland, CA 94607

CALIFORNIA High-Speed Rail Authority

CALIFORNIA HIGH-SPEED TRAIN PROJECT
SAN JOSE TO MERCED
SAN JOSE DIRIDON STATION APPROACH
VIADUCT TO I-880
TRACK ALIGNMENT DATA TABLE
CURVE NO. C193

CONTRACT NO. HSR15-34
DRAWING NO. TT-B0103-JM
SCALE NONE
SHEET NO.

rdeleon 4/30/2019 5:23:25 PM CAHSRP.tbl cvd_pdf_bw.pltcfg c:\caddlib\pw\rdeleon\46037_cahsr\dms18473\FJ-TT-B0103-JM.dgn

CURVE	ELEMENT	POINT TYPE	B2 TRACK STATION	COORDINATES		RADIUS (FT)	LENGTH (FT)	DELTA, Δ	K	P	DESIGN SPEED (MPH)	ACTUAL SUPERELEVATION (EA) (IN)	UNBALANCED SUPERELEVATION (EU) (IN)	BEARING (0°00'00") (TANGENT)	WCB (0°00'00")	
				NORTHING	EASTING										START ANGLE	END ANGLE
	TANGENT	POB	52+90.53	1944844.556	6153753.509									S 3°05'10.7" E		
	TANGENT	TS	56+04.15	1944531.398	6153770.394											
	CLOTHOID	TS	56+04.15	1944531.398	6153770.394										S 3°05'10.7" E	S 14°17'46.9" E
	CLOTHOID	SPI	59+04.75	1944231.231	6153786.579		450	11°12'36.2"	224.71	7.33						
	CLOTHOID	SC	60+54.15	1944085.344	6153823.755											
C101	ARC	SC	60+54.15	1944085.344	6153823.755											
	ARC	PI	67+04.25	1943455.376	6153984.289	1150	1183.02	58°57'33.7"			50	6.00	2.70			
	ARC	CC		1944369.322	6154938.141											
	ARC	CS	72+37.16	1943268.082	6154606.825											
	CLOTHOID	CS	72+37.16	1943268.082	6154606.825										S 73°15'20.6" E	S 84°27'56.8" E
	CLOTHOID	SPI	73+87.71	1943224.709	6154750.991		450	11°12'36.2"	224.71	7.33						
	CLOTHOID	ST	76+87.16	1943195.718	6155050.194											
	TANGENT	ST	76+87.16	1943195.718	6155050.194									S 84°27'56.8" E		
	TANGENT	TS	89+72.12	1943071.797	6156329.158											
	CLOTHOID	TS	89+72.12	1943071.797	6156329.158										S 84°27'56.8" E	S 73°15'20.6" E
	CLOTHOID	SPI	92+72.72	1943042.806	6156628.360		450	11°12'36.2"	224.71	7.33						
	CLOTHOID	SC	94+22.12	1942999.433	6156772.526											
C102	ARC	SC	94+22.12	1942999.433	6156772.526											
	ARC	PI	99+88.42	1942836.280	6157314.821	1150	1052.11	52°26'05.9"			50	6.00	2.70			
	ARC	CC		1941898.193	6156441.211											
	ARC	CS	104+74.22	1942306.955	6157516.112											
	CLOTHOID	CS	104+74.22	1942306.955	6157516.112										S 20°49'14.7" E	S 9°36'38.5" E
	CLOTHOID	SPI	106+24.77	1942166.238	6157569.624		450	11°12'36.2"	224.71	7.33						
	CLOTHOID	ST	109+24.22	1941869.853	6157619.811											
	TANGENT	ST	109+24.22	1941869.853	6157619.811									S 9°36'38.5" E		
	TANGENT	TS	111+48.03	1941649.186	6157657.176											

$FILE$ $PLTDRVS$ $PENTBLS$ $TIME$ $DATE$ $USER$

REV	DATE	BY	CHK	APP	DESCRIPTION

DESIGNED BY
DRAWN BY
CHECKED BY
IN CHARGE
DATE

RECORD PEPD SUBMITTAL
APRIL 11, 2019
NOT FOR CONSTRUCTION

HNTB
1111 Broadway
9th Floor
Oakland, CA 94607

CALIFORNIA High-Speed Rail Authority

CALIFORNIA HIGH-SPEED TRAIN PROJECT
SAN JOSE TO MERCED
SAN JOSE DIRIDON STATION APPROACH
VIADUCT TO I-880
B2 TRACK ALIGNMENT DATA TABLE
CURVE NO. C101 AND C102

CONTRACT NO. HSR15-34
DRAWING NO. TT-B0104
SCALE NONE
SHEET NO.

CURVE	ELEMENT	POINT TYPE	B2 TRACK STATION	COORDINATES		RADIUS (FT)	LENGTH (FT)	DELTA, Δ	K	P	DESIGN SPEED (MPH)	ACTUAL SUPERELEVATION (EA) (IN)	UNBALANCED SUPERELEVATION (EU) (IN)	BEARING (0°00'00") (TANGENT)	WCB (0°00'00")	
				NORTHING	EASTING										START ANGLE	END ANGLE
	CLOTHOID	TS	111+48.03	1941649.186	6157657.176										S 9°36'38.5" E	S 17°34'06.4" E
	CLOTHOID	SPI	114+81.70	1941320.199	6157712.883		500	7°57'27.9"	249.84	5.78						
	CLOTHOID	SC	116+48.03	1941161.013	6157763.284											
C103	ARC	SC	116+48.03	1941161.013	6157763.284											
	ARC	PI	117+96.77	1941019.211	6157808.180	1800	296.77	9°26'51.3"			58	6.00	1.48			
	ARC	CC		1941704.334	6159479.326											
	ARC	CS	119+44.80	1940886.702	6157875.743											
	CLOTHOID	CS	119+44.80	1940886.702	6157875.743										S 27°00'57.8" E	S 34°58'25.7" E
	CLOTHOID	SPI	121+11.77	1940737.949	6157951.589		500	7°57'27.9"	249.84	5.78						
	CLOTHOID	ST	124+44.80	1940464.534	6158142.850											
	TANGENT	ST	124+44.80	1940464.534	6158142.850									S 34°58'25.7" E		
	TANGENT	TS	127+17.50	1940241.081	6158299.162											
	COSINE	TS	127+17.50	1940241.081	6158299.162										S 34°58'25.7" E	S 34°03'45.1" E
	COSINE	SPI	129+52.18	1940048.776	6158433.684		334	0°54'40.6"	167	0.25						
	COSINE	SC	130+51.50	1939966.497	6158489.312											
C104	ARC	SC	130+51.50	1939966.497	6158489.312											
	ARC	PI	132+06.20	1939838.336	6158575.962	10500	309.38	1°41'17.7"			95	2.00	1.44			
	ARC	CC		1934085.477	6149790.830											
	ARC	CS	133+60.88	1939707.678	6158658.797											
	COSINE	CS	133+60.88	1939707.678	6158658.797										S 32°22'27.4" E	S 31°27'46.8" E
	COSINE	SPI	134+60.20	1939623.796	6158711.978		334	0°54'40.6"	167	0.25						
	COSINE	ST	136+94.88	1939423.615	6158834.471											
	TANGENT	ST	136+94.88	1939423.615	6158834.471									S 31°27'46.8" E		
	TANGENT	POE	149+99.26 = 150+00.00	1938311.012	6159515.287											

SAN FRANCISCO TO SAN JOSE EIR/S: VOLUME III
ALTERNATIVE B
BOOK B5
SHEET 111 OF 142

$FILE$ $PLTDRVS$ $PENTBLS$ $TIME$ $DATE$ $USER$

REV	DATE	BY	CHK	APP	DESCRIPTION

DESIGNED BY
DRAWN BY
CHECKED BY
IN CHARGE
DATE

RECORD PEPD SUBMITTAL

APRIL 11, 2019

NOT FOR CONSTRUCTION

HNTB
1111 Broadway
9th Floor
Oakland, CA 94607

CALIFORNIA High-Speed Rail Authority

CALIFORNIA HIGH-SPEED TRAIN PROJECT
SAN JOSE TO MERCED
MONTEREY CORRIDOR
VIADUCT TO I-880
B2 TRACK ALIGNMENT DATA TABLE
CURVE NO. C103 AND C104

CONTRACT NO. HSR15-34
DRAWING NO. TT-B0105
SCALE NONE
SHEET NO.